Commercial / Industrial

Technical/Installation Information

IMPORTANT NOTICE

READ THIS MANUAL COMPLETELY PRIOR TO BEGINNING THE INSTALLATION OF THE CRAFTSMAN SERIES PANELS.

IF THERE IS CONFLICT BETWEEN PROJECT ERECTION DRAWINGS PROVIDED OR APPROVED BY MBCI AND DETAILS IN THIS MANUAL, PROJECT ERECTION DRAWINGS WILL TAKE PRECEDENCE.

ALWAYS INSPECT EACH AND EVERY PANEL AND ALL ACCESSORIES BEFORE INSTALLATION. NEVER INSTALL ANY PRODUCT IF ITS QUALITY IS IN QUESTION. NOTIFY MBCI IMMEDIATELY IF ANY PRODUCT IS BELIEVED TO BE OUT OF TOLERANCE OR HAS BEEN DAMAGED DURING SHIPMENT.

© MBCI 2019, part of the Cornerstone Building Brands family.

The Engineering data contained herein is for the expressed use of customers and design professionals. Along with this data, it is recommended that the design professional have a copy of the most current version of the North American Specification for the Design of Cold-Formed Steel Structural Members published by the American Iron and Steel Institute to facilitate design. This Specification contains the design criteria for cold-formed steel components. Along with the Specification, the designer should reference the most current building code applicable to the project jobsite in order to determine environmental loads. If further information or guidance regarding cold-formed design practices is desired, please contact the manufacturer.

Descriptions and specifications contained herein were in effect at the time this publication was approved for printing. In a continuing effort to refine and improve products, MBCI reserves the right to discontinue products at any time or change specifications and/or designs without incurring obligation. **To ensure you have the latest information available, please inquire or visit our website at www.mbci.com.** Application details are for illustration purposes only and may not be appropriate for all environmental conditions, building designs or panel profiles. Projects should be designed to conform to applicable building codes, regulations and accepted industry practices. If there is a conflict between this manual and project erection drawings, the erection drawings will take precedence.

For complete performance specifications, product limitations, and disclaimers, please consult MBCI's Paint and Galvalume Plus® warranties. Upon receipt of payment in full, these warranties are available upon request for all painted or Galvalume Plus® prime products. Sample copies can be found at **www.mbci.com** or contact your local MBCI Sales Representative.

TABLE OF CONTENTS

SPECIFICATIONS

Galvalume Plus® CI-4
Signature® 200 ..... CI-5
Signature® 300 and Signature® 300 Metallic CI-6

ENGINEERING

AVP Panel Section Properties/Load Tables ..... CI-9 - CI-10
PBC Panel Section Properties/Load Tables ..... CI-11 - CI-13
PBD Panel Section Properties/Load Tables ..... CI-14 - CI-16
7.2 Panel Section Properties/Load Tables ..... CI-17 - CI-18

PRODUCT INFORMATION

Panel Fastener Locations - Panel Ends CI-19
Panel Fastener Locations - Interior of Panel CI-20
Punching Patterns for Cees and Zees. CI-21
Lap Patterns for Cees and Zees ..... CI-22 - CI-23
Punching Patterns for Eave Struts
- 8" x 5" x 5"
  - Standard CI-24
  - Optional CI-25
- 8" x 5" x 2¾"
  - Standard CI-26
  - Optional CI-27

SPECIFICATIONS

Galvalume Plus Coated Sheet Steel Specifications

PRODUCT NAME
Galvalume® Sheet
Galvalume® Plus Sheet

PRODUCT DESCRIPTION
Coating: "Galvalume" is the registered trade name for a patented sheet steel product having a coating of corrosion-resistant aluminum-zinc alloy applied by a continuous hot dipping process. The alloy coating of aluminum and zinc provides an optimum balance between (a) the long-term general corrosion resistance, high temperature oxidation resistance and heat reflectivity of aluminum, and (b) the galvanic protection of zinc at scratches and cut edges.

"Galvalume Plus" is the registered trade name for a bare Galvalume sheet product with a thin, clear acrylic coating. This product offers several advantages, including:

- Can be rollformed dry, with no vanishing oil applied in our coating line or at the rollforming line. In fact, Galvalume Plus should only be roll formed dry.
- Panels will be delivered to the jobsite dry, with no vanishing oil on the surface.
- Resists fingerprinting and smudging during handling and installation at the jobsite.
- Provides excellent resistance to storage stain and transit corrosion.
- Provides a bright appearance which will weather uniformly.

Basic Use: Galvalume sheet -- bare, acrylic-coated and prepainted -- is intended for applications where superior corrosion resistance is required, as in roofing, siding, pre-engineered buildings, appliances, air conditioner housings and other uses. Bare Galvalume sheet is also used for applications where resistance to oxidation at elevated temperatures is important, such as fireplaces, toasters and automotive exhaust systems.

Limitations: Based on experience to date, Bethlehem advises against contact of Galvalume sheet with lead, copper, graphite, unprotected steel, uncured concrete, or wet, green or pressure-treated wood; exposure of Galvalume sheet to water run-down from copper and the use of Galvalume sheet in harsh chemical or intensive animal confinement environs.

TECHNICAL DATA
Coating: The composition of the Galvalume sheet coating is typically 55% aluminum, 1.6% silicon and the balance zinc, nominal percentages by weight. The product is described in ASTM Specification A 792 and is available in three coating weights: ASTM Designation, AZ50 AZ55 AZ60

Triple Spot Average Minimum oz/sq ft 0.50 0.55 0.60
Single Spot Minimum oz/sq ft 0.43 0.50 0.52

A nominal coating weight of 0.50 oz/sq ft (total both sides) is equivalent to 0.8 mil thickness per side.

The coating is available as regular spangle or extra smooth surface, with or without chemical treatment. An oil coating may also be specified on bare Galvalume sheet. Galvalume Plus begins with Bethlehem's standard high-quality bare Galvalume sheet and goes a step further. As a final step in the hot-dip coating process, a very thin acrylic coating is applied to both sides of the sheet using a sophisticated roll coater. This acrylic coating provides excellent resistance to storage stain and transit corrosion. Galvalume Plus eliminates the need for conventional chemical treatment and vanishing oil.

Atmospheric Corrosion Resistance: Based on 30-year atmospheric test results, it is estimated that Galvalume sheet will outlast G90 galvanized by two to four times in marine, industrial and rural atmospheres. When compared to aluminum coated sheet steel, Galvalume sheet has superior corrosion resistance at sheared edges.

Salt Spray Corrosion Resistance: With cut edges protected,the coating on Galvalume sheet steel lasts five to ten times longer than the coating on G90 galvanized. In salt spray tests conducted with bare cut edges exposed, the corrosion resistance is typically three to four times that of G90 galvanized.

High Temperature Behavior: Bare Galvalume sheet can be used at temperatures up to 600°F without discoloration and up to 1250°F without heavy oxidationand scaling. Prolonged exposure to temperatures above 600°F can result in changes to the base metal characteristics of conventional Galvalume sheet. Galvalume H.T. Sheet (UL listed) will resist base metal change. Galvalume sheet applications subjected to these temperatures should be reviewed with a Bethlehem Sales representative.

Formability: Galvalume sheet can be formed about as readily as continuously annealed galvanized sheet. Lock forming and roll forming are readily accomplished.

Weldability: Galvalume sheet is readily weldable with conventional resistance and arc welding processes. Conditions for resistance welding are similar to those used on galvanized steel. Spot welding electrodes should be redressed as required to maintain nugget size. RWMA Class 2 or dispersion-strengthened copper alloy electrodes are suggested. Galvalume sheet can be arc welded with the shielded metal-arc and gas metal-arc processes. The lower zinc content of the coating of Galvalume sheet results in considerably less fuming during arc welding, providing reduced fume hazards to welders. For further information on welding, contact a Bethlehem Sales representative.

Appearance: Uniform visual appearance of unpainted Galvalume sheet cannot be guaranteed. Even with Galvalume Plus, the normally occurring variations in surface appearance typical of all hot-dip products will still be present and will not be masked by the thin, clear acrylic film. If uniform visual appearance is critical, then prepainted Galvalume sheet should be ordered.

Paintability: Prepainted Galvalume sheet is an ideal product for many applications where the aesthetic appearance of a painted product is desired along with excellent atmospheric corrosion resistance. Such applications include pre-engineered metal buildings, architectural panels, roofing and siding, and other building components. For more information, consult Bethlehem's Data Sheet on Prepainted Galvalume Sheet. Galvalume sheet may be fieldpainted with most paints suitable for galvanized: zinc-dust primers, butyral wash primers and acrylic latex paints. Galvalume Plus may be field painted using water-based acrylic primers and/or topcoats. Note that field painting of either Galvalume or Galvalume Plus may have warranty implications.

Typical Mechanical Properties:
(Commercial Steel)
Yield Strength 38 - 53 ksi
Tensile Strength 50 - 65 ksi
Total Elongation 20-36%
Hardness 50-65 HRB
(Structural steels, including 50 ksi and 80 ksi minimum yield strengths, are also available.)

INSTALLATION
To preserve the surface appearance of Galvalume sheet, only clean, dry gloves should be used during handling. Care should also be exercised to prevent the sheets from sliding over rough surfaces or each other. Fasteners and other component parts should have equivalent corrosion resistance. Galvalume sheet steel joints can be effectively closed using appropriate sealants such as neutral-curing silicone rubber. If other types of sealants are considered, they should possess the long-term durability, adhesion and non-corrosive properties of neutral-cure silicone rubber. Soldering is not recommended.

AVAILABILITY AND COST
Availability: Galvalume sheet is available from our plants at Sparrows Point, MD and Jackson, MS. It can be obtained in thicknesses from 0.014" to 0.055" and in widths up to 48". Inquire for heavier thicknesses. Galvalume Plus is available from our plant at Sparrows Point, MD. It can be obtained in thicknesses from 0.015" to 0.030" and in widths up to 48".
Cost: Galvalume sheet is priced competitively with G90 galvanized on a per square foot (or per part) basis. Specific price quotations for Bethlehem Galvalume sheet will be furnished upon request.

WARRANTY
Galvalume sheet conforms to the requirements of ASTM Specification A 792. Galvalume sheet is a component recognized by the American Gas Association and by Underwriters Laboratories, Inc. under File No. MH9372. Galvalume sheet is conditionally warranted against rupture, structural failure or perforation due to corrosion for a period of up to 25 years and six months when used for building panel applications

MAINTENANCE
Properly installed Galvalume sheet requires no special maintenance. Galvalume sheet, like galvanized, is subject to wet storage staining and turns gray to black if moisture is trapped between coil laps, cut length sheets, or roll formed parts during shipping and storage. The mill treats Galvalume sheet to retard wet storage staining (unless otherwise requested); however, the user should take precautions to keep Galvalume sheet dry in transit, in storage and at work sites.

SPECIFICATIONS

Metal Roof and Wall Systems

Signature® 200 SPECIFICATIONS

SPECIFICATIONS

Product Name

Signature® 200, a premium coating with proven, proprietary polymer and premium pigments.

Product Description

Uses: Signature® 200 is a factory-applied and oven-baked protective coating used on GALVALUME®, galvanized steel or aluminum substrate. Signature® 200 combines excellent physical characteristics and aesthetic values for metal panels and components. Its uses in architectural, industrial, commercial, residential and institutional metal construction are numerous. Signature® 200 coatings are formulated for hardness and flexibility, making it a versatile and durable coating system when applied over a proprietary, corrosion-resistant primer.

Limitations: Since Signature® 200 coatings require baking to cure, they cannot be field applied. Signature® 200 coatings are not approved for use on hot or cold rolled bare steel substrates intended for exterior exposure.

Composition and Materials: Signature® 200 is a thermoset coating consisting of a proprietary polyester resin modified by silicone resin intermediate. Signature® 200 uses premium, proven-durability ceramic pigments which give superior exterior protection and resistance to chemical corrosion and ultraviolet radiation.

Color: Signature® 200 coatings are available in a wide range of standard, field-proven colors. Special colors are available (minimum quantity requirements may apply) if approved by manufacturer. Polar White may not meet these specifications – please inquire.

Installation

The Signature® 200 system is factory applied over metal substrates using the coil coating process. Surfaces shall be chemically cleaned and pretreated according to manufacturers' specifications to remove contaminants and provide acceptable corrosion resistance. Total dry film thickness of topcoat (Signature® 200 protective coating and primer) is within the 0.9 - 1.05 range for coil coated applications. The pretreated substrate is primed with 0.2 - 0.25 mil of a high performance primer. The Signature® 200 protective coating is applied over the primed substrate at 0.7 - 0.8 mil. The

Signature® 200 systems incorporate outstanding exterior durability, while affording superior coil line application and post-forming capabilities.

Warranty

The Signature® 200 warranty is backed by the strictest production specifications and is one of the strongest in the industry. Details and further information are available by contacting the manufacturer.

Maintenance

The factory applied finish of Signature® 200 is baked-on coating designed to give trouble-free performance for years with little service required. However, mild detergents and/or mineral spirits are recommended for removal of surface dust and airborne chemical deposits. Air-dry touch-up paints are also available for repair of minor scratches.

Technical Assistance

Complete technical information and literature is available from manufacturer.

Signature® is a registered trademark of NCI Group, Inc.
KYNAR® 500 is a registered trademark of ELF Atochem.
HYLAR® 5000 is a registered trademark of Ausimont.
GALVALUME® is a registered trademark of **BIEC** International Inc.

PHYSICAL PROPERTIES

PROPERTY	VALUE	TEST DESIGNATION
Gloss @ 60°	20-80	ASTM D523
Film Hardness	F-Min (Eagle Turq.)	ASTM D3363
Impact Resistance, 3x Metal Thickness	No Adhesion Loss	ASTM D2794
Cross-Hatch Adhesion	No Adhesion Loss	ASTM D3359
Formability: T-Bend	(1) Acceptable	ASTM D4145
Abrasion Resistance, Falling Sand	35 ± 5 Liters	ASTM D968
ACCELERATED TESTS:		
Humidity, 1,000 hrs.	(2) Acceptable	ASTM D2247
Dew Cycle Weatherometer, 200 Total Hours	(4) Acceptable	ASTM D3361
Salt Spray, 1,000 hrs.	(3) Acceptable	ASTM B117
Chemical Spot Test	(5) Acceptable	ASTM D1308

(1) 2T to 4T, No loss of adhesion.
(2) No field blisters.
(3) ≤⅛ inch creep from scribe, few blisters, rating of 8.
(4) Chalk rating no less than 8. Color change, no more than 5ΔE Hunter units.
(5) 10% Hydrocoloric acid solution 24 hours no visible changes. 25% sodium hydroxide 1 hour test no visible change.

Descriptions and specifications contained herein were in effect at the time this publication was approved for printing. MBCI reserves the right to discontinue products at any time or change specifications and/or designs without notice and without incurring obligation.

SPECIFICATIONS

Metal Roof and Wall Systems

Signature® 300 and Signature® 300 Metallic SPECIFICATIONS

SPECIFICATIONS

Product Name

Signature® 300 and Signature® 300 Metallic, a premium fluoropolymer low gloss coating, produced with KYNAR® 500 or HYLAR® 5000 resin.

Product Description

Basic Uses: Signature® 300 coatings are specified by leading architects and used by manufacturers of metal curtain wall and other building products as a long-life exterior finish for aluminum, galvanized steel and Galvalume®. The liquid coating is factory applied and oven baked on properly prepared and primed substrates. Signature® 300 coatings typically are used as exterior finishes for metal roofing, siding, louvers, fascia, curtain wall, spandrel paneling and column covers. The building components can be post-formed from pre-coated coil stock.

Limitations: Since Signature® 300 coatings require baking to cure, they cannot be field applied. Signature® 300 coatings are not approved for use on hot or cold rolled bare steel substrates intended for exterior exposure.

Composition and Materials: Signature® 300 coatings are based on 70% KYNAR® 500 or HYLAR® 5000 PVDF fluoropolymer resin. They also are formulated with highly durable pigments and solvents blended for optimum application properties.

Color: Signature® 300 coatings are available in a wide range of standard, field-proven colors. Special colors are available (minimum quantity requirements may apply) if approved by manufacturer.

Technical Data

See Chart Below.

Installation

Signature® 300 coatings may be coil coated on HDG steel, Aluminum or Galvalume® substrates that have been pretreated and primed according to manufacturer specifications. The entire system is applied in the factory and oven baked. Topcoat dry film thicknesses are within the 0.9-1.1 mil range (Note: which refers to the combination of primer and the Signature® 300 protective coating) for coil coated applications. The pretreated substrate is primed with 0.2 - 0.30 mil of a high performance primer. The Signature® 300 protective coating is applied over the primed substrate at 0.7 - 0.8 mil. The flexibility of the system permits coil-coated stock to be post-formed by either a roll former or press brake. All applicators of Signature® 300 coatings must have the approval of manufacturer. A list of approved applicators is available upon request.

Warranty

The Signature® 300 warranty is backed by the strictest production specifications and is one of the strongest in the industry. Details and further information are available by contacting manufacturer.

Maintenance

Signature® 300 coatings are virtually maintenance free and non-staining. If necessary, surface residue may be removed by conventional cleaning solvents or detergents. Minor scratches may be touched-up with a specially formulated, field-applied coating of the same color.

Signature® 300 coatings can be used in conjunction with conventional sealants and caulking compounds. Mortar, plaster, etc. will neither adhere to nor stain the surface.

Technical Assistance

Complete technical information and literature is available from manufacturer.

Signature® is a registered trademark of NCI Group, Inc.
KYNAR® 500 is a registered trademark of ELF Atochem.
HYLAR® 5000 is a registered trademark of Ausimont.
GALVALUME® is a registered trademark of BIEC International Inc.

TECHNICAL DATA

PHYSICAL PROPERTIES Signature® 300

Property	Value	Test Designation
Gloss @ 85°	8-15	ASTM D523
Film Hardness	HB-Min (Eagle Turq.)	ASTM D3363 (NCCA II-12) (2)
Impact Resistance, .5" Ball Indenter, 3x Metal Thickness	(8) Acceptable	ASTM D2794
Formability:		
180° bend around 1/8" mandrel	(1) Acceptable	ASTM D522
Adhesion	(2) Acceptable	ASTM D3359 (NCCA II-5)
Abrasion Resistance, Falling Sand	67 Liters	ASTM D968
Accelerated Weathering, 5,000 hrs. exposure	(3) Acceptable	ASTM D4587, G53, or G154
Humidity, 3,000 hrs.	(4) Acceptable	ASTM D2247, Apparatus A1
Salt Spray, 2,000 hrs.	(5) Acceptable	ASTM B117 (NCCA III-2)
Cyclic Salt Fog/UV exposure, 3,000 hrs.	(6) Acceptable	ASTM D5894
Chemical Spot Test	(7) Acceptable	ASTM D1308

(1) No evidence of cracking, and no loss of adhesion to the point of metal rupture.
(2) No removal of finish after 1/16-inch cross-hatching to bare metal, to impact limits or point of metal rupture.
(3) No cracking, peeling, blistering, loss of adhesion or corrosion of base metal. Chalk rating of 8 per ASTM D4214. Color change less than 2ΔE per ASTM D2244.
(4) Rating of 10, no blistering, cracking, creepage or corrosion per ASTM D1654.
(5) No more than 5/32-inch average creepage from scribed line rating of 7, field test rating of 8 per ASTM D1654.
(6) No more than 1/32-inch creepage from scribed line, rating of 8. No blistering, rating of 10 per ASTM D1654.
(7) 10% Hydrocoloric acid solution 24 hours no visible changes. 25% sodium hydroxide 1 hour test no color change, no blistering.
(8) Reverse impact and direct impact, no cracking or loss of adhesion.

Descriptions and specifications contained herein were in effect at the time this publication was approved for printing. We reserve the right to discontinue products at any time or change specifications and/or designs without notice and without incurring obligation.

SPECIFICATIONS

AVP PANEL

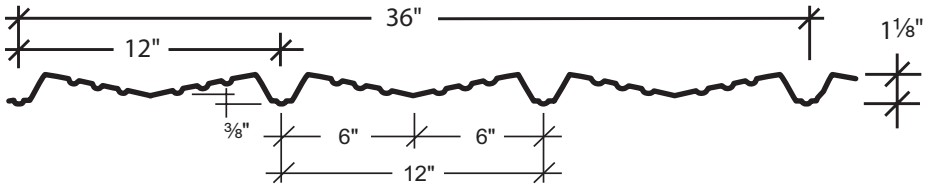

SECTION PROPERTIES								
			NEGATIVE BENDING			POSITIVE BENDING		
PANEL	Fy	WEIGHT	Ixe	Sxe	Maxo	Ixe	Sxe	Maxo
GAUGE	(KSI)	(PSF)	(IN.4/FT.)	(IN.3/FT.)	(KIP-IN.)	(IN.4/FT.)	(IN.3/FT.)	(KIP-IN.)
29	60*	0.75	0.019	0.030	1.081	0.017	0.029	1.047
26	60*	0.94	0.026	0.042	1.524	0.025	0.044	1.568
24	50	1.14	0.033	0.053	1.581	0.034	0.055	1.657
22	50	1.44	0.042	0.068	2.029	0.043	0.071	2.114

* Fy is 80-ksi reduced to 60-ksi in accordance with the 2012 edition of the North American Specification For Design Of Cold-Formed Steel Structural Members - A2.3.2.

NOTES:
1. All calculations for the properties of AVP Wall panels are calculated in accordance with the 2012 edition of the North American Specification For Design Of Cold-Formed Steel Structural Members.
2. Ixe is for deflection determination.
3. Sxe is for bending.
4. Maxo is allowable bending moment.
5. All values are for one foot of panel width.

The Engineering data contained herein is for the expressed use of customers and design professionals. Along with this data, it is recommended that the design professional have a copy of the most current version of the *North American Specification for the Design of Cold-Formed Steel Structural Members* published by the American Iron and Steel Institute to facilitate design. This Specification contains the design criteria for cold-formed steel components. Along with the Specification, the designer should reference the most current building code applicable to the project jobsite in order to determine environmental loads. If further information or guidance regarding cold-formed design practices is desired, please contact the manufacturer.

SPECIFICATIONS

AVP PANEL
ALLOWABLE UNIFORM LOADS IN POUNDS PER SQUARE FOOT

29 Gauge (0.0133”), Fy = 60 ksi, Fu = 61.5 ksi

SPAN TYPE	LOAD TYPE	SPAN IN FEET						
		3.0	4.0	5.0	6.0	7.0	8.0	9.0
1-span	NEGATIVE WIND LOAD	80.09	45.05	28.83	20.02	14.71	11.26	8.90
	LIVE LOAD/DEFLECTION	77.59	43.64	27.93	19.40	14.25	10.91	8.62
2-span	NEGATIVE WIND LOAD	71.40	41.58	27.06	18.97	14.02	10.77	8.54
	LIVE LOAD/DEFLECTION	42.46	31.85	25.48	19.56	14.46	11.11	8.81
3-span	NEGATIVE WIND LOAD	86.38	50.95	33.38	23.49	17.40	13.40	10.62
	LIVE LOAD/DEFLECTION	48.25	36.19	28.95	24.13	17.94	13.81	10.96
4-span	NEGATIVE WIND LOAD	81.54	47.88	31.30	22.00	16.28	12.53	9.93
	LIVE LOAD/DEFLECTION	46.44	34.83	27.87	22.67	16.78	12.92	10.24

26 Gauge (0.0181”), Fy = 60 ksi, Fu = 61.5 ksi

SPAN TYPE	LOAD TYPE	SPAN IN FEET						
		3.0	4.0	5.0	6.0	7.0	8.0	9.0
1-span	NEGATIVE WIND LOAD	112.91	63.51	40.65	28.23	20.74	15.88	12.55
	LIVE LOAD/DEFLECTION	116.22	65.37	41.84	29.05	21.35	16.34	12.71
2-span	NEGATIVE WIND LOAD	110.26	63.42	41.03	28.66	21.13	16.22	12.83
	LIVE LOAD/DEFLECTION	77.50	58.12	39.90	27.86	20.54	15.76	12.47
3-span	NEGATIVE WIND LOAD	134.89	78.27	50.86	35.61	26.30	20.20	16.00
	LIVE LOAD/DEFLECTION	88.06	66.05	49.48	34.64	25.57	19.64	15.55
4-span	NEGATIVE WIND LOAD	126.85	73.38	47.61	33.31	24.58	18.88	14.95
	LIVE LOAD/DEFLECTION	84.76	63.57	46.31	32.39	23.90	18.35	14.53

24 Gauge (0.0223”), Fy = 50 ksi, Fu = 60 ksi

SPAN TYPE	LOAD TYPE	SPAN IN FEET						
		3.0	4.0	5.0	6.0	7.0	8.0	9.0
1-span	NEGATIVE WIND LOAD	117.14	65.89	42.17	29.28	21.51	16.47	13.02
	LIVE LOAD/DEFLECTION	122.64	68.98	44.15	30.66	22.53	17.25	13.63
2-span	NEGATIVE WIND LOAD	117.44	67.29	43.45	30.32	22.34	17.14	13.56
	LIVE LOAD/DEFLECTION	96.36	64.41	41.56	28.99	21.35	16.38	12.96
3-span	NEGATIVE WIND LOAD	144.19	83.23	53.94	37.71	27.83	21.36	16.91
	LIVE LOAD/DEFLECTION	109.50	79.74	51.62	36.07	26.60	20.42	16.16
4-span	NEGATIVE WIND LOAD	135.42	77.97	50.46	35.26	26.00	19.96	15.80
	LIVE LOAD/DEFLECTION	105.39	74.67	48.28	33.72	24.86	19.08	15.10

22 Gauge (0.0286”), Fy = 50 ksi, Fu = 60 ksi

SPAN TYPE	LOAD TYPE	SPAN IN FEET						
		3.0	4.0	5.0	6.0	7.0	8.0	9.0
1-span	NEGATIVE WIND LOAD	150.29	84.54	54.10	37.57	27.60	21.13	16.70
	LIVE LOAD/DEFLECTION	156.61	88.10	56.38	39.15	28.77	22.02	17.40
2-span	NEGATIVE WIND LOAD	149.98	85.94	55.49	38.72	28.53	21.89	17.31
	LIVE LOAD/DEFLECTION	144.40	82.63	53.31	37.19	27.40	21.01	16.62
3-span	NEGATIVE WIND LOAD	184.15	106.30	68.88	48.16	35.54	27.28	21.60
	LIVE LOAD/DEFLECTION	175.54	102.28	66.22	46.28	34.13	26.20	20.74
4-span	NEGATIVE WIND LOAD	172.95	99.58	64.45	45.03	33.21	25.49	20.17
	LIVE LOAD/DEFLECTION	166.66	95.79	61.94	43.26	31.89	24.47	19.37

Notes:
1. Strength calculations based on the 2012 AISI Standard “North American Specification for the Design of Cold-formed Steel Structural Members.”
2. Allowable loads are applicable for uniform loading and spans without overhangs.
3. LIVE LOAD/DEFLECTION load capacities are for those loads that push the panel against its supports. The applicable limit states are flexure, shear, combined shear and flexure, web crippling at end and interior supports, and a deflection limit of L/60 under strength-level loads.
4. NEGATIVE WIND LOAD capacities are for those loads that pull the panel away from its supports. The applicable limit states are flexure, shear, combined shear and flexure, and a deflection limit of L/60 under 10-year wind loading.
5. Panel pullover and Screw pullout capacity must be checked separately using the screws employed for each particular application when utilizing this load chart.
6. Effective yield strength has been determined in accordance with section A2.3.2 of the 2012 NAS specification.
7. The use of any accessories other than those provided by the manufacturer may damage panels, void all warranties and will void all engineering data.
8. This material is subject to change without notice. Please contact MBCI for most current data.

The Engineering data contained herein is for the expressed use of customers and design professionals. Along with this data, it is recommended that the design professional have a copy of the most current version of the *North American Specification for the Design of Cold-Formed Steel Structural Members* published by the American Iron and Steel Institute to facilitate design. This Specification contains the design criteria for cold-formed steel components. Along with the Specification, the designer should reference the most current building code applicable to the project jobsite in order to determine environmental loads. If further information or guidance regarding cold-formed design practices is desired, please contact the manufacturer.

SPECIFICATIONS

PBC PANEL

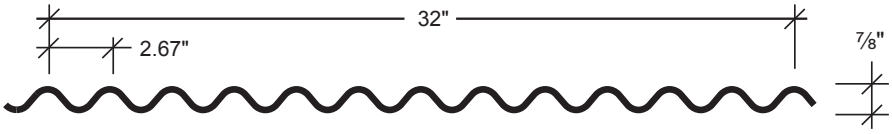

SECTION PROPERTIES								
			NEGATIVE BENDING			POSITIVE BENDING		
PANEL	Fy	WEIGHT	Ixe	Sxe	Maxo	Ixe	Sxe	Maxo
GAUGE	(KSI)	(PSF)	(IN.4/FT.)	(IN.3/FT.)	(KIP-IN.)	(IN.4/FT.)	(IN.3/FT.)	(KIP-IN.)
29	60*	0.84	0.019	0.044	1.575	0.019	0.044	1.575
26	60*	1.06	0.027	0.059	2.135	0.027	0.059	2.135
24	50	1.28	0.033	0.073	2.185	0.033	0.073	2.185
22	50	1.62	0.042	0.093	2.788	0.042	0.093	2.788

* Fy is 80-ksi reduced to 60-ksi in accordance with the 2012 edition of the North American Specification For Design Of Cold-Formed Steel Structural Members - A2.3.2.

NOTES:
1. All calculations for the properties of PBC Roof panels are calculated in accordance with the 2012 edition of the North American Specification For Design Of Cold-Formed Steel Structural Members.
2. Ixe is for deflection determination.
3. Sxe is for bending.
4. Maxo is allowable bending moment.
5. All values are for one foot of panel width.

The Engineering data contained herein is for the expressed use of customers and design professionals. Along with this data, it is recommended that the design professional have a copy of the most current version of the *North American Specification for the Design of Cold-Formed Steel Structural Members* published by the American Iron and Steel Institute to facilitate design. This Specification contains the design criteria for cold-formed steel components. Along with the Specification, the designer should reference the most current building code applicable to the project jobsite in order to determine environmental loads. If further information or guidance regarding cold-formed design practices is desired, please contact the manufacturer.

SPECIFICATIONS

PBC ROOF PANEL
ALLOWABLE UNIFORM LOADS IN POUNDS PER SQUARE FOOT

29 Gauge (0.0133”), Fy = 60 ksi, Fu = 61.5 ksi

SPAN TYPE	LOAD TYPE	SPAN IN FEET						
		3.0	4.0	5.0	6.0	7.0	8.0	9.0
1-span	NEGATIVE WIND LOAD	116.66	65.62	42.00	29.16	21.26	14.24	10.00
	LIVE LOAD/DEFLECTION	63.03	26.59	13.61	7.88	4.96	3.32	2.33
2-span	NEGATIVE WIND LOAD	114.69	64.99	41.74	29.04	21.36	16.37	12.94
	LIVE LOAD/DEFLECTION	85.02	63.77	32.79	18.98	11.95	8.01	5.62
3-span	NEGATIVE WIND LOAD	142.32	80.90	52.03	36.23	26.66	20.43	16.16
	LIVE LOAD/DEFLECTION	96.61	50.18	25.69	14.87	9.36	6.27	4.41
4-span	NEGATIVE WIND LOAD	133.18	75.62	48.61	33.84	24.90	19.08	15.09
	LIVE LOAD/DEFLECTION	92.99	53.27	27.27	15.78	9.94	6.66	4.68

26 Gauge (0.0181”), Fy = 60 ksi, Fu = 61.5 ksi

SPAN TYPE	LOAD TYPE	SPAN IN FEET						
		3.0	4.0	5.0	6.0	7.0	8.0	9.0
1-span	NEGATIVE WIND LOAD	158.15	88.96	56.94	39.54	28.98	19.42	13.64
	LIVE LOAD/DEFLECTION	85.91	36.24	18.56	10.74	6.76	4.53	3.18
2-span	NEGATIVE WIND LOAD	155.46	88.10	56.58	39.37	28.96	22.19	17.54
	LIVE LOAD/DEFLECTION	155.46	87.30	44.70	25.87	16.29	10.91	7.66
3-span	NEGATIVE WIND LOAD	192.89	109.66	70.53	49.11	36.14	27.70	21.90
	LIVE LOAD/DEFLECTION	162.12	68.39	35.02	20.26	12.76	8.55	6.00
4-span	NEGATIVE WIND LOAD	180.50	102.50	65.89	45.87	33.75	25.87	20.45
	LIVE LOAD/DEFLECTION	172.09	72.60	37.17	21.51	13.55	9.08	6.37

24 Gauge (0.0223”), Fy = 50 ksi, Fu = 60 ksi

SPAN TYPE	LOAD TYPE	SPAN IN FEET						
		3.0	4.0	5.0	6.0	7.0	8.0	9.0
1-span	NEGATIVE WIND LOAD	161.82	91.03	58.26	40.46	29.72	22.76	16.82
	LIVE LOAD/DEFLECTION	105.98	44.71	22.89	13.25	8.34	5.59	3.93
2-span	NEGATIVE WIND LOAD	159.03	90.13	57.89	40.28	29.63	22.70	17.95
	LIVE LOAD/DEFLECTION	159.03	90.13	55.14	31.91	20.10	13.46	9.45
3-span	NEGATIVE WIND LOAD	197.31	112.18	72.16	50.25	36.98	28.34	22.41
	LIVE LOAD/DEFLECTION	197.31	84.37	43.20	25.00	15.74	10.55	7.41
4-span	NEGATIVE WIND LOAD	184.64	104.86	67.42	46.93	34.53	26.46	20.92
	LIVE LOAD/DEFLECTION	184.64	89.56	45.86	26.54	16.71	11.20	7.86

22 Gauge (0.0286”), Fy = 50 ksi, Fu = 60 ksi

SPAN TYPE	LOAD TYPE	SPAN IN FEET						
		3.0	4.0	5.0	6.0	7.0	8.0	9.0
1-span	NEGATIVE WIND LOAD	206.48	116.15	74.33	51.62	37.93	29.04	21.62
	LIVE LOAD/DEFLECTION	136.17	57.45	29.41	17.02	10.72	7.18	5.04
2-span	NEGATIVE WIND LOAD	202.85	114.99	73.86	51.39	37.80	28.96	22.90
	LIVE LOAD/DEFLECTION	202.85	114.99	70.85	41.00	25.82	17.30	12.15
3-span	NEGATIVE WIND LOAD	251.65	143.11	92.06	64.11	47.18	36.16	28.60
	LIVE LOAD/DEFLECTION	251.65	108.41	55.51	32.12	20.23	13.55	9.52
4-span	NEGATIVE WIND LOAD	235.50	133.77	86.01	59.88	44.06	33.77	26.70
	LIVE LOAD/DEFLECTION	235.50	115.08	58.92	34.10	21.47	14.39	10.10

Notes:
1. Strength calculations based on the 2012 AISI Standard “North American Specification for the Design of Cold-formed Steel Structural Members.”
2. Allowable loads are applicable for uniform loading and spans without overhangs.
3. LIVE LOAD/DEFLECTION load capacities are for those loads that push the panel against its supports. The applicable limit states are flexure, shear, combined shear and flexure, web crippling at end and interior supports, and a deflection limit of L/180 under strength-level loads.
4. NEGATIVE WIND LOAD capacities are for those loads that pull the panel away from its supports. The applicable limit states are flexure, shear, combined shear and flexure, and a deflection limit of L/60 under 10-year wind loading.
5. Panel pullover and Screw pullout capacity must be checked separately using the screws employed for each particular application when utilizing this load chart.
6. Effective yield strength has been determined in accordance with section A2.3.2 of the 2012 NAS specification.
7. The use of any accessories other than those provided by the manufacturer may damage panels, void all warranties and will void all engineering data.
8. This material is subject to change without notice. Please contact MBCI for most current data.

The Engineering data contained herein is for the expressed use of customers and design professionals. Along with this data, it is recommended that the design professional have a copy of the most current version of the *North American Specification for the Design of Cold-Formed Steel Structural Members* published by the American Iron and Steel Institute to facilitate design. This Specification contains the design criteria for cold-formed steel components. Along with the Specification, the designer should reference the most current building code applicable to the project jobsite in order to determine environmental loads. If further information or guidance regarding cold-formed design practices is desired, please contact the manufacturer.

SPECIFICATIONS

PBC WALL PANEL
ALLOWABLE UNIFORM LOADS IN POUNDS PER SQUARE FOOT

29 Gauge (0.0133”), Fy = 60 ksi, Fu = 61.5 ksi

SPAN TYPE	LOAD TYPE	SPAN IN FEET						
		3.0	4.0	5.0	6.0	7.0	8.0	9.0
1-span	NEGATIVE WIND LOAD	116.66	65.62	42.00	29.16	21.26	14.24	10.00
	LIVE LOAD/DEFLECTION	116.66	65.62	42.00	29.16	21.26	14.24	10.00
2-span	NEGATIVE WIND LOAD	114.69	64.99	41.74	29.04	21.36	16.37	12.94
	LIVE LOAD/DEFLECTION	85.02	63.77	41.74	29.04	21.36	16.37	12.94
3-span	NEGATIVE WIND LOAD	142.32	80.90	52.03	36.23	26.66	20.43	16.16
	LIVE LOAD/DEFLECTION	96.61	72.46	52.03	36.23	26.66	20.43	16.16
4-span	NEGATIVE WIND LOAD	133.18	75.62	48.61	33.84	24.90	19.08	15.09
	LIVE LOAD/DEFLECTION	92.99	69.74	48.61	33.84	24.90	19.08	15.09

26 Gauge (0.0181”), Fy = 60 ksi, Fu = 61.5 ksi

SPAN TYPE	LOAD TYPE	SPAN IN FEET						
		3.0	4.0	5.0	6.0	7.0	8.0	9.0
1-span	NEGATIVE WIND LOAD	158.15	88.96	56.94	39.54	28.98	19.42	13.64
	LIVE LOAD/DEFLECTION	158.15	88.96	56.94	39.54	28.98	19.42	13.64
2-span	NEGATIVE WIND LOAD	155.46	88.10	56.58	39.37	28.96	22.19	17.54
	LIVE LOAD/DEFLECTION	155.46	88.10	56.58	39.37	28.96	22.19	17.54
3-span	NEGATIVE WIND LOAD	192.89	109.66	70.53	49.11	36.14	27.70	21.90
	LIVE LOAD/DEFLECTION	192.89	109.66	70.53	49.11	36.14	27.70	21.90
4-span	NEGATIVE WIND LOAD	180.50	102.50	65.89	45.87	33.75	25.87	20.45
	LIVE LOAD/DEFLECTION	180.50	102.50	65.89	45.87	33.75	25.87	20.45

24 Gauge (0.0223”), Fy = 50 ksi, Fu = 60 ksi

SPAN TYPE	LOAD TYPE	SPAN IN FEET						
		3.0	4.0	5.0	6.0	7.0	8.0	9.0
1-span	NEGATIVE WIND LOAD	161.82	91.03	58.26	40.46	29.72	22.76	16.82
	LIVE LOAD/DEFLECTION	161.82	91.03	58.26	40.46	29.72	22.76	16.82
2-span	NEGATIVE WIND LOAD	159.03	90.13	57.89	40.28	29.63	22.70	17.95
	LIVE LOAD/DEFLECTION	159.03	90.13	57.89	40.28	29.63	22.70	17.95
3-span	NEGATIVE WIND LOAD	197.31	112.18	72.16	50.25	36.98	28.34	22.41
	LIVE LOAD/DEFLECTION	197.31	112.18	72.16	50.25	36.98	28.34	22.41
4-span	NEGATIVE WIND LOAD	184.64	104.86	67.42	46.93	34.53	26.46	20.92
	LIVE LOAD/DEFLECTION	184.64	104.86	67.42	46.93	34.53	26.46	20.92

22 Gauge (0.0286”), Fy = 50 ksi, Fu = 60 ksi

SPAN TYPE	LOAD TYPE	SPAN IN FEET						
		3.0	4.0	5.0	6.0	7.0	8.0	9.0
1-span	NEGATIVE WIND LOAD	206.48	116.15	74.33	51.62	37.93	29.04	21.62
	LIVE LOAD/DEFLECTION	206.48	116.15	74.33	51.62	37.93	29.04	21.62
2-span	NEGATIVE WIND LOAD	202.85	114.99	73.86	51.39	37.80	28.96	22.90
	LIVE LOAD/DEFLECTION	202.85	114.99	73.86	51.39	37.80	28.96	22.90
3-span	NEGATIVE WIND LOAD	251.65	143.11	92.06	64.11	47.18	36.16	28.60
	LIVE LOAD/DEFLECTION	251.65	143.11	92.06	64.11	47.18	36.16	28.60
4-span	NEGATIVE WIND LOAD	235.50	133.77	86.01	59.88	44.06	33.77	26.70
	LIVE LOAD/DEFLECTION	235.50	133.77	86.01	59.88	44.06	33.77	26.70

Notes:
1. Strength calculations based on the 2012 AISI Standard “North American Specification for the Design of Cold-formed Steel Structural Members.”
2. Allowable loads are applicable for uniform loading and spans without overhangs.
3. LIVE LOAD/DEFLECTION load capacities are for those loads that push the panel against its supports. The applicable limit states are flexure, shear, combined shear and flexure, web crippling at end and interior supports, and a deflection limit of L/60 under strength-level loads.
4. NEGATIVE WIND LOAD capacities are for those loads that pull the panel away from its supports. The applicable limit states are flexure, shear, combined shear and flexure, and a deflection limit of L/60 under 10-year wind loading.
5. Panel pullover and Screw pullout capacity must be checked separately using the screws employed for each particular application when utilizing this load chart.
6. Effective yield strength has been determined in accordance with section A2.3.2 of the 2012 NAS specification.
7. The use of any accessories other than those provided by the manufacturer may damage panels, void all warranties and will void all engineering data.
8. This material is subject to change without notice. Please contact MBCI for most current data.

The Engineering data contained herein is for the expressed use of customers and design professionals. Along with this data, it is recommended that the design professional have a copy of the most current version of the *North American Specification for the Design of Cold-Formed Steel Structural Members* published by the American Iron and Steel Institute to facilitate design. This Specification contains the design criteria for cold-formed steel components. Along with the Specification, the designer should reference the most current building code applicable to the project jobsite in order to determine environmental loads. If further information or guidance regarding cold-formed design practices is desired, please contact the manufacturer.

SPECIFICATIONS

PBD PANEL

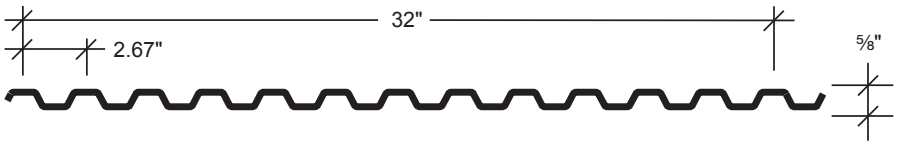

SECTION PROPERTIES								
			NEGATIVE BENDING			POSITIVE BENDING		
PANEL	Fy	WEIGHT	Ixe	Sxe	Maxo	Ixe	Sxe	Maxo
GAUGE	(KSI)	(PSF)	(IN.4/FT.)	(IN.3/FT.)	(KIP-IN.)	(IN.4/FT.)	(IN.3/FT.)	(KIP-IN.)
29	60*	0.84	0.019	0.044	1.575	0.019	0.044	1.575
26	60*	1.06	0.027	0.059	2.135	0.027	0.059	2.135
24	50	1.28	0.033	0.073	2.185	0.033	0.073	2.185
22	50	1.62	0.042	0.093	2.788	0.042	0.093	2.788

* Fy is 80-ksi reduced to 60-ksi in accordance with the 2012 edition of the North American Specification For Design Of Cold-Formed Steel Structural Members - A2.3.2.

NOTES:
1. All calculations for the properties of PBD Roof panels are calculated in accordance with the 2012 edition of the North American Specification For Design Of Cold-Formed Steel Structural Members.
2. Ixe is for deflection determination.
3. Sxe is for bending.
4. Maxo is allowable bending moment.
5. All values are for one foot of panel width.

The Engineering data contained herein is for the expressed use of customers and design professionals. Along with this data, it is recommended that the design professional have a copy of the most current version of the *North American Specification for the Design of Cold-Formed Steel Structural Members* published by the American Iron and Steel Institute to facilitate design. This Specification contains the design criteria for cold-formed steel components. Along with the Specification, the designer should reference the most current building code applicable to the project jobsite in order to determine environmental loads. If further information or guidance regarding cold-formed design practices is desired, please contact the manufacturer.

SPECIFICATIONS

PBD ROOF PANEL
ALLOWABLE UNIFORM LOADS IN POUNDS PER SQUARE FOOT

29 Gauge (0.0133”), Fy = 60 ksi, Fu = 61.5 ksi

SPAN TYPE	LOAD TYPE	SPAN IN FEET						
		3.0	4.0	5.0	6.0	7.0	8.0	9.0
1-span	NEGATIVE WIND LOAD	106.73	60.04	35.53	20.56	12.95	8.68	6.09
	LIVE LOAD/DEFLECTION	38.45	16.22	8.31	4.81	3.03	2.03	1.42
2-span	NEGATIVE WIND LOAD	105.41	59.69	38.32	26.66	19.60	15.02	11.87
	LIVE LOAD/DEFLECTION	105.12	45.14	23.11	13.38	8.42	5.64	3.96
3-span	NEGATIVE WIND LOAD	130.89	74.33	47.78	33.26	24.47	18.17	12.76
	LIVE LOAD/DEFLECTION	80.62	34.01	17.41	10.08	6.35	4.25	2.99
4-span	NEGATIVE WIND LOAD	122.45	69.46	44.63	31.06	22.85	17.51	13.73
	LIVE LOAD/DEFLECTION	86.73	36.59	18.73	10.84	6.83	4.57	3.21

26 Gauge (0.0181”), Fy = 60 ksi, Fu = 61.5 ksi

SPAN TYPE	LOAD TYPE	SPAN IN FEET						
		3.0	4.0	5.0	6.0	7.0	8.0	9.0
1-span	NEGATIVE WIND LOAD	163.78	92.13	51.62	29.87	18.81	12.60	8.85
	LIVE LOAD/DEFLECTION	56.04	23.64	12.11	7.01	4.41	2.96	2.08
2-span	NEGATIVE WIND LOAD	162.01	91.92	59.07	41.11	30.24	23.17	18.32
	LIVE LOAD/DEFLECTION	149.98	63.27	32.40	18.75	11.81	7.91	5.55
3-span	NEGATIVE WIND LOAD	200.80	114.34	73.60	51.27	37.74	26.03	18.28
	LIVE LOAD/DEFLECTION	116.06	48.96	25.07	14.51	9.14	6.12	4.30
4-span	NEGATIVE WIND LOAD	187.97	106.90	68.77	47.89	35.25	27.02	19.53
	LIVE LOAD/DEFLECTION	123.91	52.28	26.77	15.49	9.75	6.53	4.59

24 Gauge (0.0223”), Fy = 50 ksi, Fu = 60 ksi

SPAN TYPE	LOAD TYPE	SPAN IN FEET						
		3.0	4.0	5.0	6.0	7.0	8.0	9.0
1-span	NEGATIVE WIND LOAD	155.32	87.37	55.92	38.83	25.19	16.87	11.85
	LIVE LOAD/DEFLECTION	75.14	31.70	16.23	9.39	5.91	3.96	2.78
2-span	NEGATIVE WIND LOAD	154.61	87.62	56.28	39.16	28.80	22.07	17.45
	LIVE LOAD/DEFLECTION	152.72	77.68	39.77	23.02	14.49	9.71	6.82
3-span	NEGATIVE WIND LOAD	191.83	109.06	70.15	48.85	35.95	27.55	21.79
	LIVE LOAD/DEFLECTION	144.26	60.86	31.16	18.03	11.36	7.61	5.34
4-span	NEGATIVE WIND LOAD	179.51	101.95	65.54	45.63	33.57	25.73	20.34
	LIVE LOAD/DEFLECTION	153.12	64.60	33.07	19.14	12.05	8.07	5.67

22 Gauge (0.0286”), Fy = 50 ksi, Fu = 60 ksi

SPAN TYPE	LOAD TYPE	SPAN IN FEET						
		3.0	4.0	5.0	6.0	7.0	8.0	9.0
1-span	NEGATIVE WIND LOAD	201.90	113.57	72.68	50.48	32.69	21.90	15.38
	LIVE LOAD/DEFLECTION	97.47	41.12	21.05	12.18	7.67	5.14	3.61
2-span	NEGATIVE WIND LOAD	200.54	113.69	73.03	50.82	37.38	28.64	22.64
	LIVE LOAD/DEFLECTION	198.37	99.25	50.82	29.41	18.52	12.41	8.71
3-span	NEGATIVE WIND LOAD	248.75	141.48	91.02	63.39	46.66	35.76	28.28
	LIVE LOAD/DEFLECTION	184.31	77.75	39.81	23.04	14.51	9.72	6.83
4-span	NEGATIVE WIND LOAD	232.80	132.26	85.04	59.21	43.57	33.39	26.40
	LIVE LOAD/DEFLECTION	195.65	82.54	42.26	24.46	15.40	10.32	7.25

Notes:
1. Strength calculations based on the 2012 AISI Standard “North American Specification for the Design of Cold-formed Steel Structural Members.”
2. Allowable loads are applicable for uniform loading and spans without overhangs.
3. LIVE LOAD/DEFLECTION load capacities are for those loads that push the panel against its supports. The applicable limit states are flexure, shear, combined shear and flexure, web crippling at end and interior supports, and a deflection limit of L/180 under strength-level loads.
4. NEGATIVE WIND LOAD capacities are for those loads that pull the panel away from its supports. The applicable limit states are flexure, shear, combined shear and flexure, and a deflection limit of L/60 under 10-year wind loading.
5. Panel pullover and Screw pullout capacity must be checked separately using the screws employed for each particular application when utilizing this load chart.
6. Effective yield strength has been determined in accordance with section A2.3.2 of the 2012 NAS specification.
7. The use of any accessories other than those provided by the manufacturer may damage panels, void all warranties and will void all engineering data.
8. This material is subject to change without notice. Please contact MBCI for most current data.

The Engineering data contained herein is for the expressed use of customers and design professionals. Along with this data, it is recommended that the design professional have a copy of the most current version of the *North American Specification for the Design of Cold-Formed Steel Structural Members* published by the American Iron and Steel Institute to facilitate design. This Specification contains the design criteria for cold-formed steel components. Along with the Specification, the designer should reference the most current building code applicable to the project jobsite in order to determine environmental loads. If further information or guidance regarding cold-formed design practices is desired, please contact the manufacturer.

SPECIFICATIONS

PBD WALL PANEL
ALLOWABLE UNIFORM LOADS IN POUNDS PER SQUARE FOOT

29 Gauge (0.0133”), Fy = 60 ksi, Fu = 61.5 ksi

SPAN TYPE	LOAD TYPE	SPAN IN FEET						
		3.0	4.0	5.0	6.0	7.0	8.0	9.0
1-span	NEGATIVE WIND LOAD	106.73	60.04	35.53	20.56	12.95	8.68	6.09
	LIVE LOAD/DEFLECTION	107.04	60.21	35.59	20.60	12.97	8.69	6.10
2-span	NEGATIVE WIND LOAD	105.41	59.69	38.32	26.66	19.60	15.02	11.87
	LIVE LOAD/DEFLECTION	105.12	59.52	38.21	26.58	19.55	14.98	11.84
3-span	NEGATIVE WIND LOAD	130.89	74.33	47.78	33.26	24.47	18.17	12.76
	LIVE LOAD/DEFLECTION	130.54	74.12	47.65	33.17	24.41	18.22	12.80
4-span	NEGATIVE WIND LOAD	122.45	69.46	44.63	31.06	22.85	17.51	13.73
	LIVE LOAD/DEFLECTION	122.12	69.27	44.51	30.98	22.79	17.46	13.77

26 Gauge (0.0181”), Fy = 60 ksi, Fu = 61.5 ksi

SPAN TYPE	LOAD TYPE	SPAN IN FEET						
		3.0	4.0	5.0	6.0	7.0	8.0	9.0
1-span	NEGATIVE WIND LOAD	163.78	92.13	51.62	29.87	18.81	12.60	8.85
	LIVE LOAD/DEFLECTION	165.27	92.96	51.88	30.02	18.91	12.67	8.90
2-span	NEGATIVE WIND LOAD	162.01	91.92	59.07	41.11	30.24	23.17	18.32
	LIVE LOAD/DEFLECTION	160.61	91.11	58.54	40.74	29.97	22.97	18.16
3-span	NEGATIVE WIND LOAD	200.80	114.34	73.60	51.27	37.74	26.03	18.28
	LIVE LOAD/DEFLECTION	199.08	113.34	72.95	50.82	37.41	26.23	18.42
4-span	NEGATIVE WIND LOAD	187.97	106.90	68.77	47.89	35.25	27.02	19.53
	LIVE LOAD/DEFLECTION	186.36	105.96	68.16	47.47	34.93	26.77	19.67

24 Gauge (0.0223”), Fy = 50 ksi, Fu = 60 ksi

SPAN TYPE	LOAD TYPE	SPAN IN FEET						
		3.0	4.0	5.0	6.0	7.0	8.0	9.0
1-span	NEGATIVE WIND LOAD	155.32	87.37	55.92	38.83	25.19	16.87	11.85
	LIVE LOAD/DEFLECTION	157.32	88.49	56.63	39.33	25.35	16.98	11.93
2-span	NEGATIVE WIND LOAD	154.61	87.62	56.28	39.16	28.80	22.07	17.45
	LIVE LOAD/DEFLECTION	152.72	86.53	55.57	38.66	28.44	21.79	17.22
3-span	NEGATIVE WIND LOAD	191.83	109.06	70.15	48.85	35.95	27.55	21.79
	LIVE LOAD/DEFLECTION	189.51	107.72	69.28	48.24	35.50	27.21	21.51
4-span	NEGATIVE WIND LOAD	179.51	101.95	65.54	45.63	33.57	25.73	20.34
	LIVE LOAD/DEFLECTION	177.33	100.69	64.72	45.05	33.15	25.40	20.08

22 Gauge (0.0286”), Fy = 50 ksi, Fu = 60 ksi

SPAN TYPE	LOAD TYPE	SPAN IN FEET						
		3.0	4.0	5.0	6.0	7.0	8.0	9.0
1-span	NEGATIVE WIND LOAD	201.90	113.57	72.68	50.48	32.69	21.90	15.38
	LIVE LOAD/DEFLECTION	204.19	114.86	63.16	36.55	23.02	15.42	10.83
2-span	NEGATIVE WIND LOAD	200.54	113.69	73.03	50.82	37.38	28.64	22.64
	LIVE LOAD/DEFLECTION	198.37	112.44	72.22	50.25	36.96	28.32	22.39
3-span	NEGATIVE WIND LOAD	248.75	141.48	91.02	63.39	46.66	35.76	28.28
	LIVE LOAD/DEFLECTION	246.10	139.94	90.02	62.69	43.52	29.16	20.48
4-span	NEGATIVE WIND LOAD	232.80	132.26	85.04	59.21	43.57	33.39	26.40
	LIVE LOAD/DEFLECTION	230.30	130.81	84.10	58.55	43.08	30.95	21.74

Notes:
1. Strength calculations based on the 2012 AISI Standard “North American Specification for the Design of Cold-formed Steel Structural Members.”
2. Allowable loads are applicable for uniform loading and spans without overhangs.
3. LIVE LOAD/DEFLECTION load capacities are for those loads that push the panel against its supports. The applicable limit states are flexure, shear, combined shear and flexure, web crippling at end and interior supports, and a deflection limit of L/60 under strength-level loads.
4. NEGATIVE WIND LOAD capacities are for those loads that pull the panel away from its supports. The applicable limit states are flexure, shear, combined shear and flexure, and a deflection limit of L/60 under 10-year wind loading.
5. Panel pullover and Screw pullout capacity must be checked separately using the screws employed for each particular application when utilizing this load chart.
6. Effective yield strength has been determined in accordance with section A2.3.2 of the 2012 NAS specification.
7. The use of any accessories other than those provided by the manufacturer may damage panels, void all warranties and will void all engineering data.
8. This material is subject to change without notice. Please contact MBCI for most current data.

The Engineering data contained herein is for the expressed use of customers and design professionals. Along with this data, it is recommended that the design professional have a copy of the most current version of the *North American Specification for the Design of Cold-Formed Steel Structural Members* published by the American Iron and Steel Institute to facilitate design. This Specification contains the design criteria for cold-formed steel components. Along with the Specification, the designer should reference the most current building code applicable to the project jobsite in order to determine environmental loads. If further information or guidance regarding cold-formed design practices is desired, please contact the manufacturer.

SPECIFICATIONS

7.2 PANEL

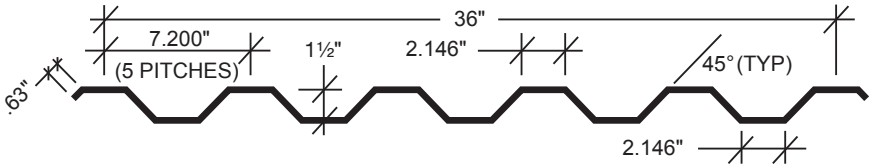

SECTION PROPERTIES								
			NEGATIVE BENDING			POSITIVE BENDING		
PANEL	Fy	WEIGHT	Ixe	Sxe	Maxo	Ixe	Sxe	Maxo
GAUGE	(KSI)	(PSF)	(IN.4/FT.)	(IN.3/FT.)	(KIP-IN.)	(IN.4/FT.)	(IN.3/FT.)	(KIP-IN.)
29	60*	0.66	0.048	0.048	1.928	0.050	0.056	2.269
26	60*	0.86	0.072	0.077	3.208	0.075	0.091	3.759
24	50	1.06	0.100	0.113	3.395	0.099	0.124	3.719
22	50	1.36	0.134	0.156	4.675	0.133	0.171	5.114

* Fy is 80-ksi reduced to 60-ksi in accordance with the 2012 edition of the North American Specification For Design Of Cold-Formed Steel Structural Members - A2.3.2.

NOTES:
1. All calculations for the properties of 7.2 Roof panels are calculated in accordance with the 2012 edition of the North American Specification For Design Of Cold-Formed Steel Structural Members.
2. Ixe is for deflection determination.
3. Sxe is for bending.
4. Maxo is allowable bending moment.
5. All values are for one foot of panel width.

The Engineering data contained herein is for the expressed use of customers and design professionals. Along with this data, it is recommended that the design professional have a copy of the most current version of the *North American Specification for the Design of Cold-Formed Steel Structural Members* published by the American Iron and Steel Institute to facilitate design. This Specification contains the design criteria for cold-formed steel components. Along with the Specification, the designer should reference the most current building code applicable to the project jobsite in order to determine environmental loads. If further information or guidance regarding cold-formed design practices is desired, please contact the manufacturer.

SPECIFICATIONS

7.2 PANEL
ALLOWABLE UNIFORM LOADS IN POUNDS PER SQUARE FOOT

29 Gauge (0.0133”), Fy = 60 ksi, Fu = 61.5 ksi

SPAN TYPE	LOAD TYPE	SPAN IN FEET						
		3.0	4.0	5.0	6.0	7.0	8.0	9.0
1-span	NEGATIVE WIND LOAD	142.84	80.35	51.42	35.71	26.24	20.09	15.87
	LIVE LOAD/DEFLECTION	102.44	68.59	35.12	20.32	12.80	8.57	6.02
2-span	NEGATIVE WIND LOAD	110.34	71.62	49.82	36.44	27.70	21.71	17.44
	LIVE LOAD/DEFLECTION	102.19	64.82	44.37	32.09	24.20	18.86	15.09
3-span	NEGATIVE WIND LOAD	123.35	82.15	58.28	43.24	33.22	26.25	21.21
	LIVE LOAD/DEFLECTION	115.90	75.44	52.58	38.51	28.80	19.30	13.55
4-span	NEGATIVE WIND LOAD	119.43	78.91	55.63	41.08	31.45	24.78	19.99
	LIVE LOAD/DEFLECTION	111.72	72.13	49.98	36.45	27.66	20.76	14.58

26 Gauge (0.0181”), Fy = 60 ksi, Fu = 61.5 ksi

SPAN TYPE	LOAD TYPE	SPAN IN FEET						
		3.0	4.0	5.0	6.0	7.0	8.0	9.0
1-span	NEGATIVE WIND LOAD	237.61	133.66	85.54	59.40	43.64	33.41	26.40
	LIVE LOAD/DEFLECTION	162.95	103.02	52.75	30.53	19.22	12.88	9.04
2-span	NEGATIVE WIND LOAD	222.59	136.44	91.38	65.16	48.68	37.69	30.01
	LIVE LOAD/DEFLECTION	143.95	107.96	79.83	56.57	42.08	32.49	25.82
3-span	NEGATIVE WIND LOAD	258.47	162.17	110.20	79.32	59.63	46.36	37.03
	LIVE LOAD/DEFLECTION	163.58	122.69	97.08	64.84	40.83	27.35	19.21
4-span	NEGATIVE WIND LOAD	247.30	153.99	104.13	74.72	56.05	43.52	34.72
	LIVE LOAD/DEFLECTION	157.45	118.09	91.48	65.14	44.07	29.52	20.74

24 Gauge (0.0223”), Fy = 50 ksi, Fu = 60 ksi

SPAN TYPE	LOAD TYPE	SPAN IN FEET						
		3.0	4.0	5.0	6.0	7.0	8.0	9.0
1-span	NEGATIVE WIND LOAD	251.48	141.46	90.53	62.87	46.19	35.36	27.94
	LIVE LOAD/DEFLECTION	202.14	135.78	69.52	40.23	25.33	16.97	11.92
2-span	NEGATIVE WIND LOAD	253.79	147.73	96.14	67.39	49.79	38.27	30.31
	LIVE LOAD/DEFLECTION	156.28	117.21	88.20	61.73	45.57	35.00	27.71
3-span	NEGATIVE WIND LOAD	307.17	181.07	118.61	83.46	61.81	47.58	37.73
	LIVE LOAD/DEFLECTION	177.59	133.19	106.55	76.57	53.77	36.02	25.30
4-span	NEGATIVE WIND LOAD	289.91	170.16	111.21	78.15	57.83	44.49	35.27
	LIVE LOAD/DEFLECTION	170.93	128.19	102.17	71.66	52.97	38.84	27.28

22 Gauge (0.0286”), Fy = 50 ksi, Fu = 60 ksi

SPAN TYPE	LOAD TYPE	SPAN IN FEET						
		3.0	4.0	5.0	6.0	7.0	8.0	9.0
1-span	NEGATIVE WIND LOAD	346.31	194.80	124.67	86.58	63.61	48.70	38.48
	LIVE LOAD/DEFLECTION	322.96	181.52	92.94	53.78	33.87	22.69	15.94
2-span	NEGATIVE WIND LOAD	357.18	205.97	133.40	93.26	68.79	52.81	41.80
	LIVE LOAD/DEFLECTION	199.38	149.54	119.63	85.47	63.01	48.35	38.26
3-span	NEGATIVE WIND LOAD	435.96	253.83	165.20	115.80	85.57	65.76	52.09
	LIVE LOAD/DEFLECTION	226.57	169.93	135.94	106.25	71.31	47.77	33.55
4-span	NEGATIVE WIND LOAD	410.29	238.09	154.70	108.33	80.00	61.46	48.67
	LIVE LOAD/DEFLECTION	218.07	163.56	130.84	99.36	73.31	51.25	35.99

Notes:
1. Strength calculations based on the 2012 AISI Standard “North American Specification for the Design of Cold-formed Steel Structural Members.”
2. Allowable loads are applicable for uniform loading and spans without overhangs.
3. LIVE LOAD/DEFLECTION load capacities are for those loads that push the panel against its supports. The applicable limit states are flexure, shear, combined shear and flexure, web crippling at end and interior supports, and a deflection limit of L/180 under strength-level loads.
4. NEGATIVE WIND LOAD capacities are for those loads that pull the panel away from its supports. The applicable limit states are flexure, shear, combined shear and flexure, and a deflection limit of L/60 under 10-year wind loading.
5. Panel pullover and Screw pullout capacity must be checked separately using the screws employed for each particular application when utilizing this load chart.
6. Effective yield strength has been determined in accordance with section A2.3.2 of the 2012 NAS specification.
7. The use of any accessories other than those provided by the manufacturer may damage panels, void all warranties and will void all engineering data.
8. This material is subject to change without notice. Please contact MBCI for most current data.

The Engineering data contained herein is for the expressed use of customers and design professionals. Along with this data, it is recommended that the design professional have a copy of the most current version of the *North American Specification for the Design of Cold-Formed Steel Structural Members* published by the American Iron and Steel Institute to facilitate design. This Specification contains the design criteria for cold-formed steel components. Along with the Specification, the designer should reference the most current building code applicable to the project jobsite in order to determine environmental loads. If further information or guidance regarding cold-formed design practices is desired, please contact the manufacturer.

SPECIFICATIONS

PANEL FASTENER LOCATIONS
(Panel Ends)

PBC PANEL - (ROOF AND WALL APPLICATION)

PBD PANEL

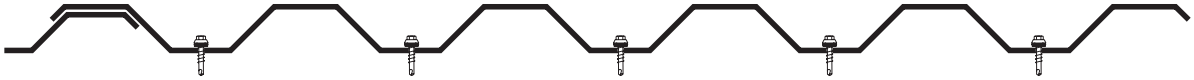

7.2 PANEL

AVP PANEL

NOTES:

1. PBR, PBU, PBC, PBD and AVP have unsymmetrical purlin bearing side lap legs. (Panel Side lap with extended foot to bear on framing) However, where possible, the panel should be lapped against prevailing wind.
2. The above are typical fastener spacings. However, they may not be appropriate for all applications. Consult a professional engineer for use on any specific application.
3. Minimum ½" X 3⁄32" tape sealer required at panel side laps when used as roof panels. (Excludes PBC Panel)
4. Side lap fasteners are required. Typical spacing is 20" O.C. However, this spacing may not be appropriate for all applications. Consult a professional engineer for use on any specific application. (Excludes PBC Panel)

SPECIFICATIONS

PANEL FASTENER LOCATIONS
(Interior of Panel)

PBC PANEL - (ROOF AND WALL APPLICATION)

PBD PANEL

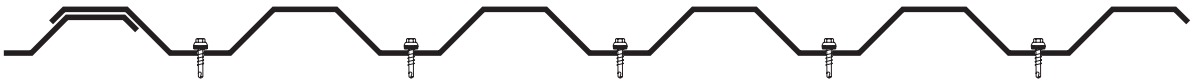

7.2 PANEL

AVP PANEL

NOTES:

1. PBR, PBU, PBC, PBD and AVP have unsymmetrical purlin bearing side lap legs. (Panel Side lap with extended foot to bear on framing) However, where possible, the panel should be lapped against prevailing wind.
2. The above are typical fastener spacings. However, they may not be appropriate for all applications. Consult a professional engineer for use on any specific application.
3. Minimum ½" X 3/32" tape sealer required at panel side laps when used as roof panels. (Excludes PBC Panel)
4. Side lap fasteners are required. Typical spacing is 20" O.C. However, this spacing may not be appropriate for all applications. Consult a professional engineer for use on any specific application. (Excludes PBC Panel)

SPECIFICATIONS

PUNCHING PATTERNS FOR CEES AND ZEES

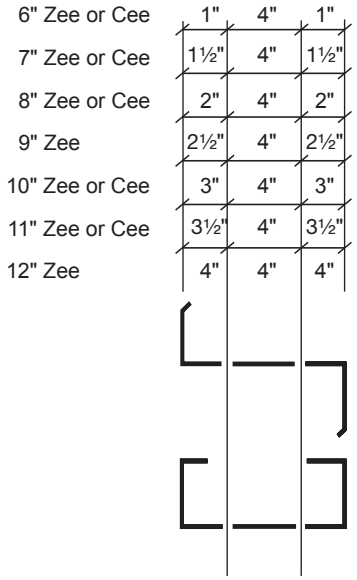

Pattern G
Common End

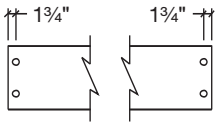

Pattern A
(See page CI-19 for lap options)

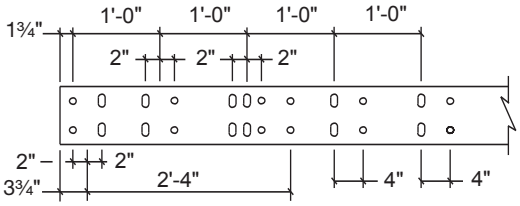

Pattern B
(See page CI-20 for lap options)

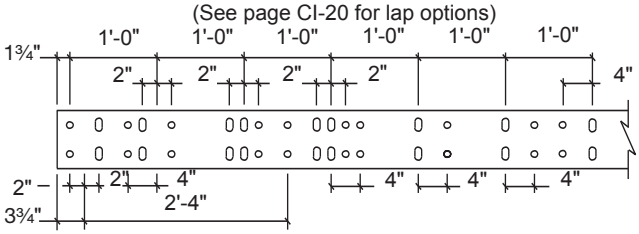

NOTES:
1. Web punching is available on all 6”-10” Zees and Cees and 12” Zees.
2. Please inquire for 4” Zee or Cee special web punching availability.

Pattern D & E - Common Flange
(See Note 1)

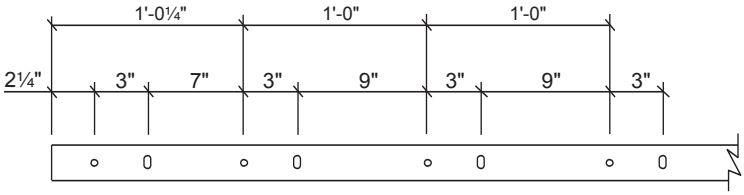

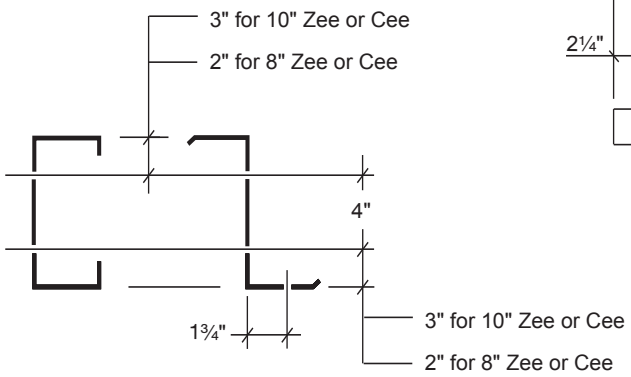

NOTES:
1. Common flange punching Pattern D has Pattern A in the web. Common flange punching Pattern E has Pattern B in the web.
2. Flange punching is not available on 4" or smaller Zees and Cees.
3. All holes are ⅝".
4. All slots are ⅝" x ¾".

SPECIFICATIONS

LAP PATTERNS FOR CEES AND ZEES
Pattern A
(For Simple Span, Short Lap, Long Lap, 3' Offset and Max Lap)

SIMPLE SPAN

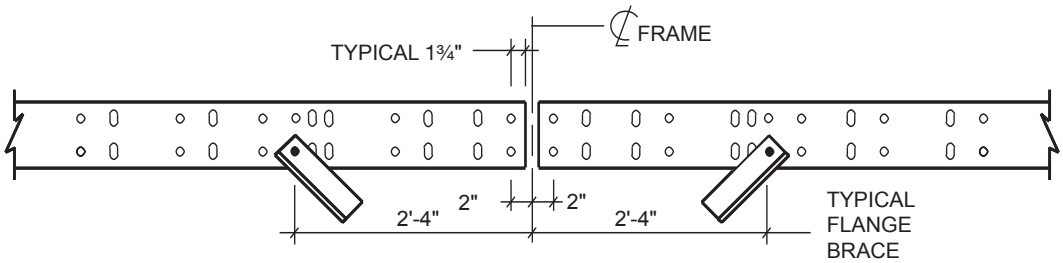

SHORT LAP

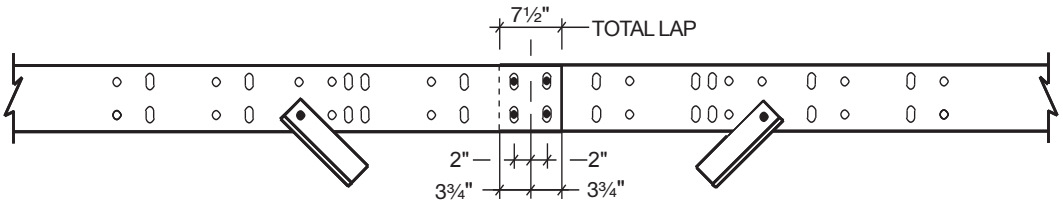

LONG LAP

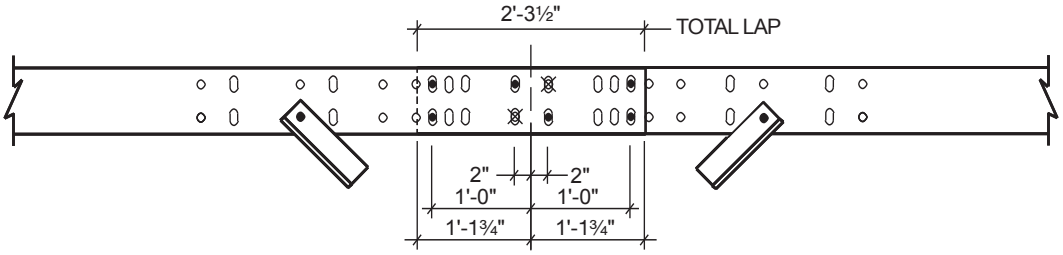

THREE FOOT OFFSET LAP

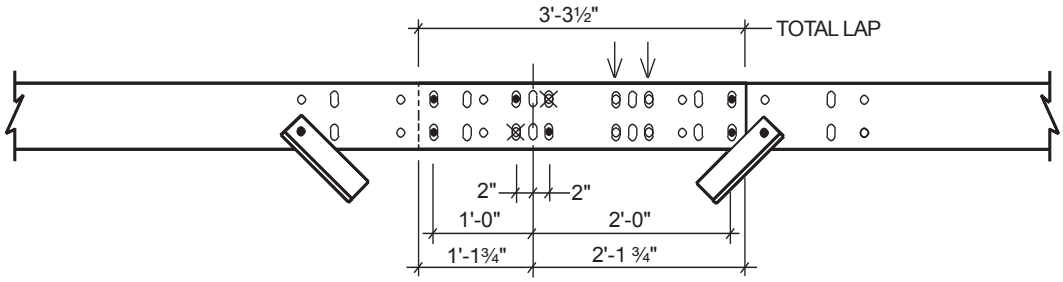

MAX LAP

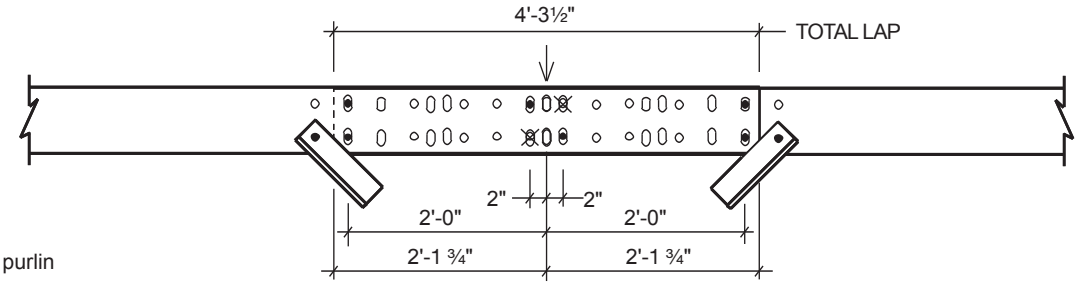

LEGEND

- Holes punched in purlin
- Bolted holes
- Holes normally not bolted
- Holes that align but are not bolted

SPECIFICATIONS

LAP PATTERNS FOR CEES AND ZEES
Pattern B
(All laps available in Pattern A plus 5' Offset and Super Lap)

FIVE FOOT OFFSET LAP

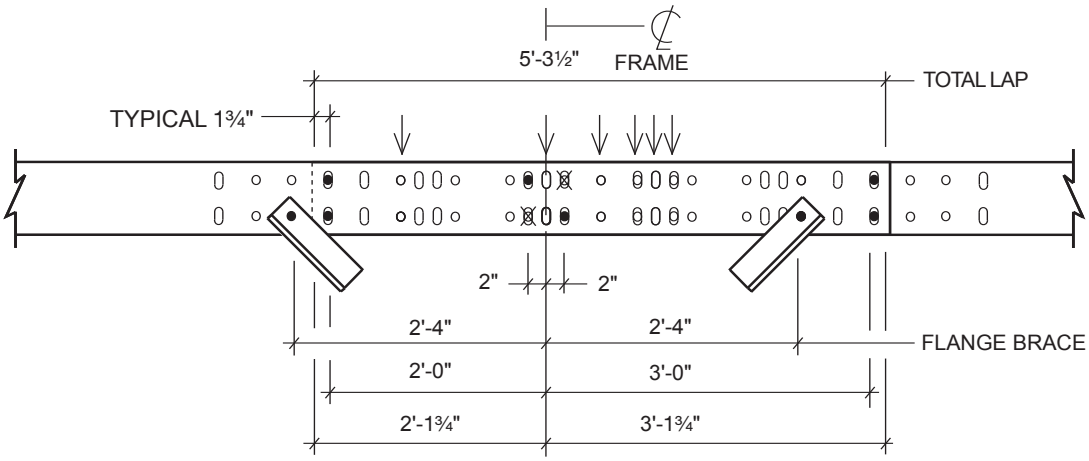

SUPER LAP

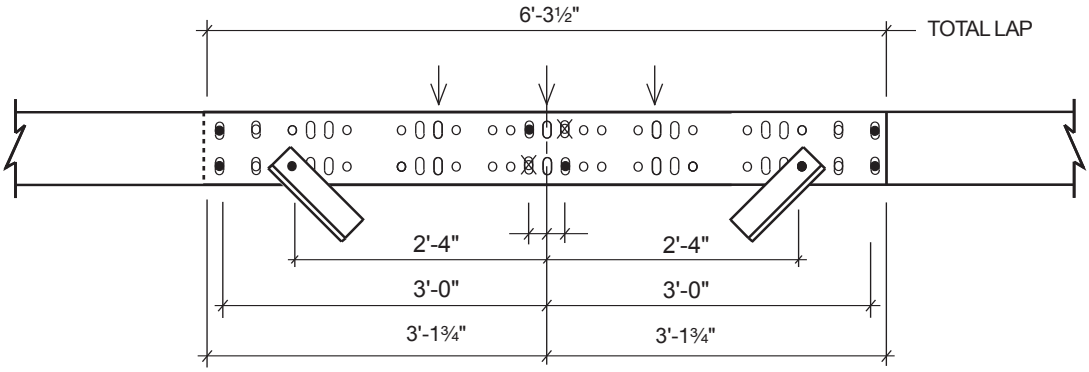

LEGEND

- Holes punched in purlin
- Bolted holes
- Holes normally not bolted
- Holes that align but are not bolted

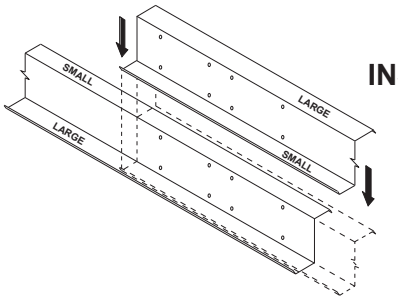

INSTRUCTIONS FOR WEB BOLTED ZEES ONLY

(These instructions do not apply to flange bolted zees)

1. Zees have unequal flanges for easier installation.
2. The large flange is 1/4" wider than the small flange
3. Lap the small flange inside the large flange.
4. A 1/2" triangle ▲, pointing to the large flange, is punched in the web at both ends of the zee.

SPECIFICATIONS

STANDARD
PUNCHING PATTERNS FOR 8” x 5” x 5” EAVE STRUTS

SINGLE SLOPE

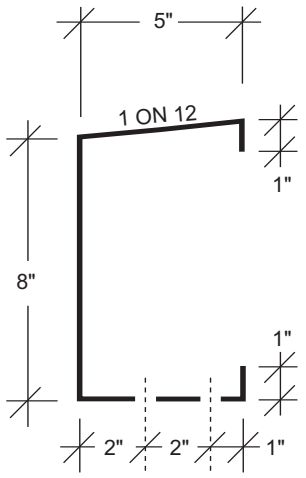

DOUBLE SLOPE

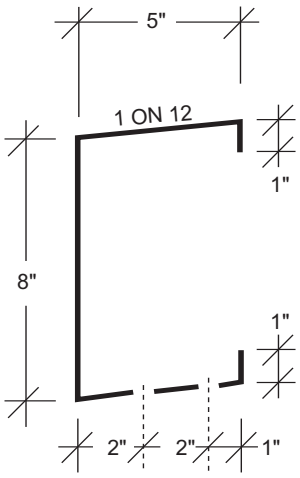

FLANGE PUNCHING SIDE VIEW

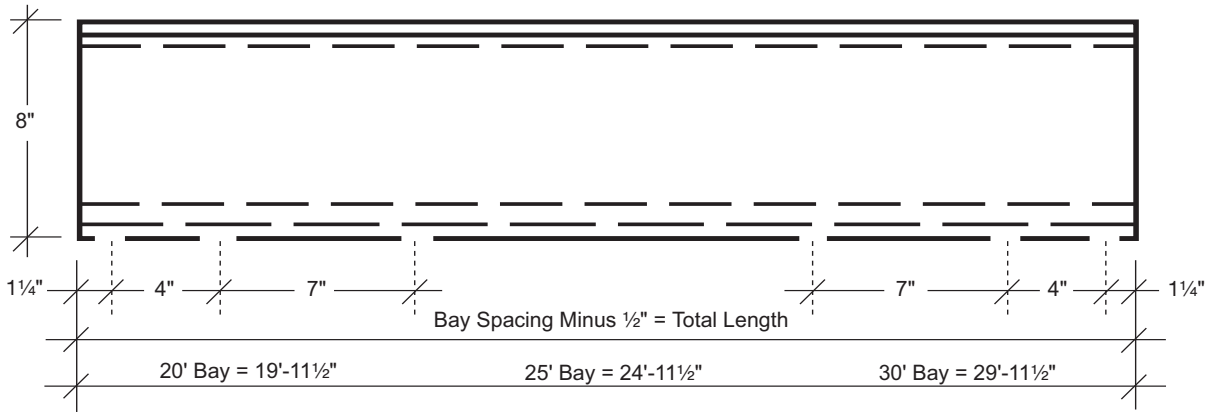

NOTES:

1. All holes are 13⁄16".
2. Eave Strut is 12 or 14 gauge.

NOTES

OPTIONAL
PUNCHING PATTERNS FOR 8” x 5” x 5” EAVE STRUTS

SINGLE SLOPE

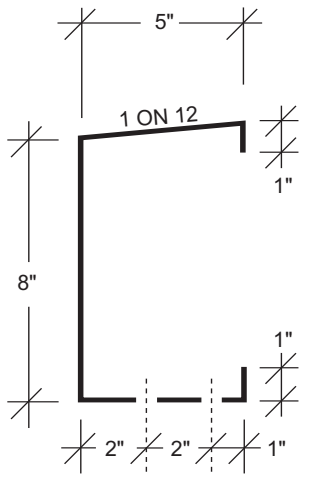

DOUBLE SLOPE

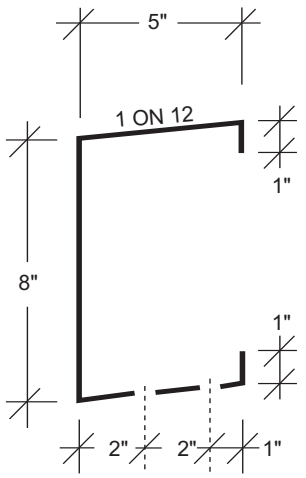

FLANGE PUNCHING SIDE VIEW

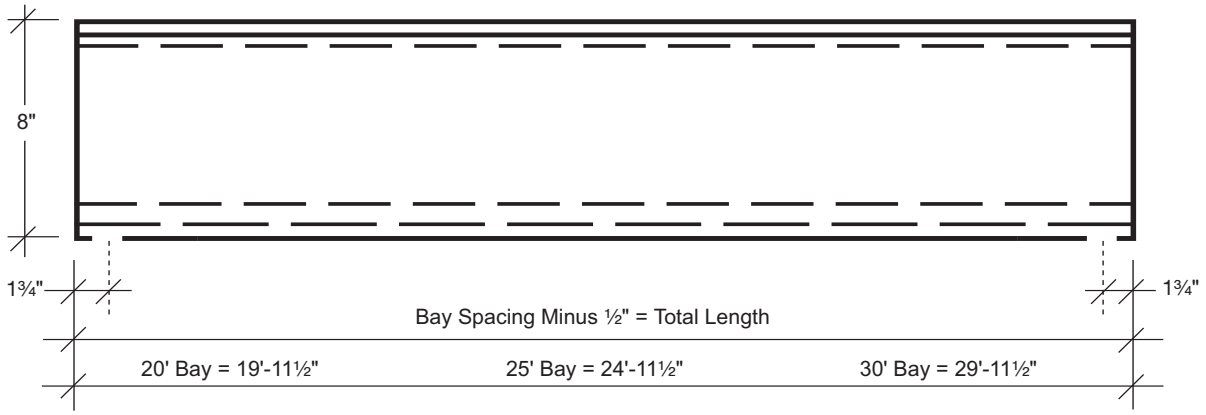

NOTES:

1. All holes are ⅝".
2. Eave Strut is 12 or 14 gauge.

SPECIFICATIONS

STANDARD
PUNCHING PATTERNS FOR 8” x 5” x 2 ¾” EAVE STRUTS

LOW EAVE DOUBLE SLOPE

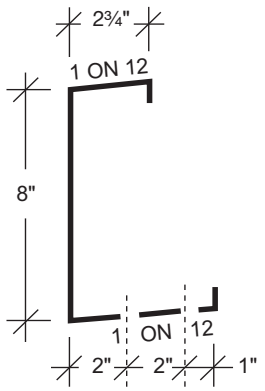

HIGH EAVE DOUBLE SLOPE

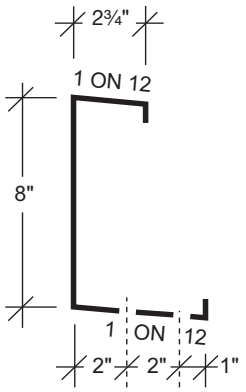

LOW EAVE SINGLE SLOPE

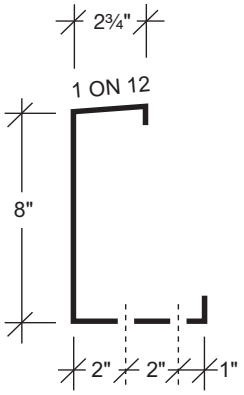

HIGH EAVE SINGLE SLOPE

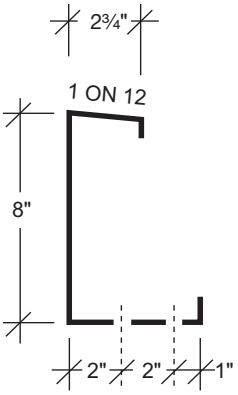

FLANGE PUNCHING SIDE VIEW

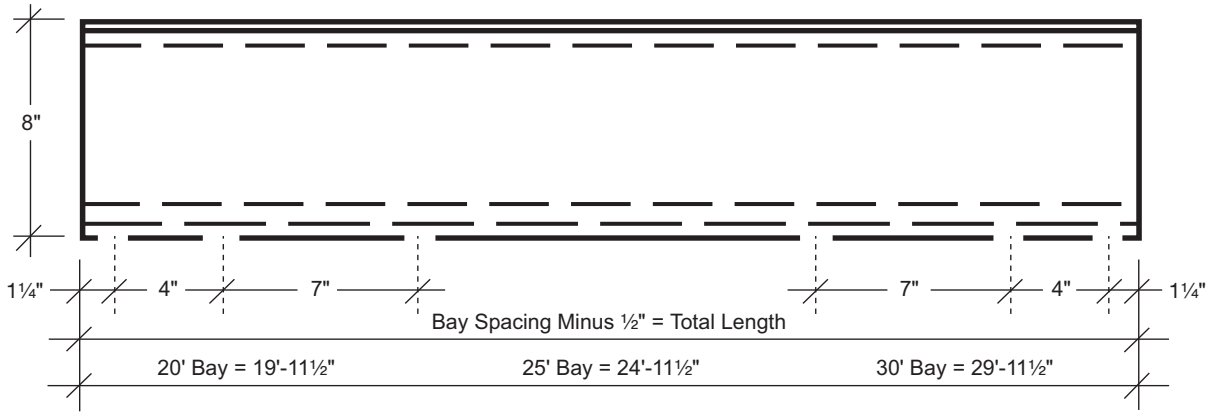

NOTES:

1. All holes are 13⁄16".
2. Eave Strut is 12 or 14 gauge.

SPECIFICATIONS

OPTIONAL
PUNCHING PATTERNS FOR 8” x 5” x 2 ¾” EAVE STRUTS

LOW EAVE DOUBLE SLOPE

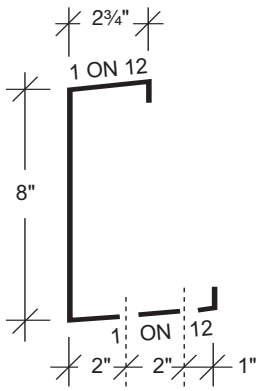

HIGH EAVE DOUBLE SLOPE

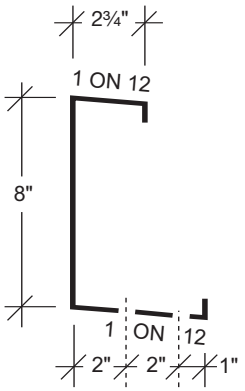

LOW EAVE SINGLE SLOPE

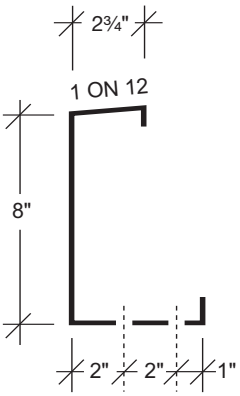

HIGH EAVE SINGLE SLOPE

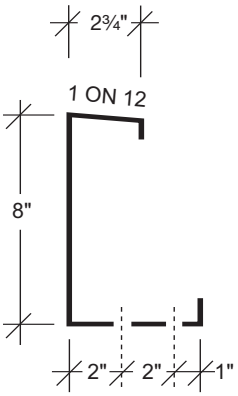

FLANGE PUNCHING SIDE VIEW

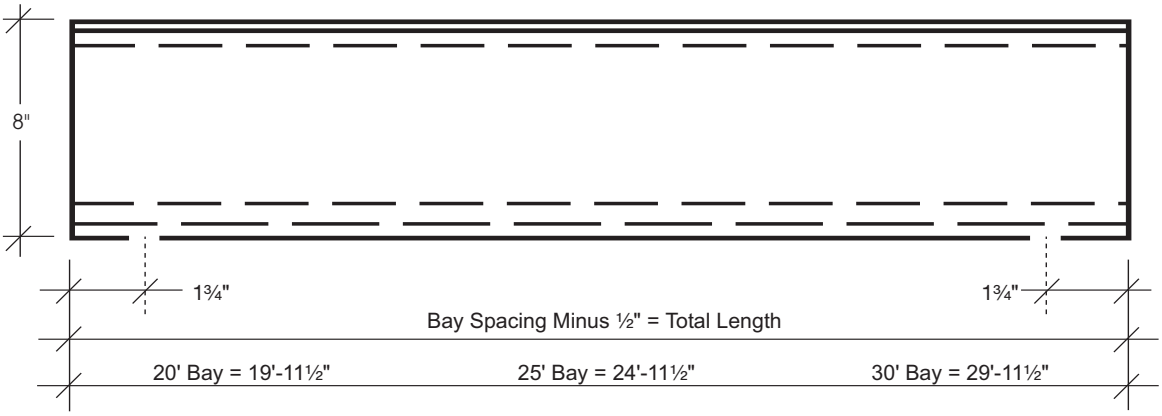

NOTES:

1. All holes are ⅝".
2. Eave Strut is 12 or 14 gauge.

Metal Roof and Wall Systems

For the most current information available, visit our Web site at www.mbci.com

Houston, TX
14031 West Hardy
P.O. Box 38217
Houston, TX 77238
281-407-6915

Adel, GA
1601 Rogers Road
P.O. Box 1107
Adel, GA 31620
888-514-6062

Atlanta, GA
2280 Monier Avenue
P.O. Box 44729
Atlanta, GA 30336
678-337-1619

Atwater, CA
550 Industry Way
P.O. Box 793
Atwater, CA 95301
209-445-3891

Ennis TX
1804 Jack McKay Blvd.
P.O. Box 1210
Ennis, TX 75120
469-256-8255

Indianapolis, IN
1780 McCall Drive
P.O. Box 657
Shelbyville, IN 46176
317-364-4329

Lubbock, TX
5711 East FM-40
P.O. Box 10133
Lubbock, TX 79408
806-224-2724

Memphis, TN
300 Highway 51 North
P.O. Box 366
Hernando, MS 38632
662-298-2337

Oklahoma City, OK
7000 S. Eastern Avenue
P.O. Box 95998
Oklahoma City, OK 73143
405-492-6968

Phoenix, AZ
660 South 91st Avenue
P.O. Box 739
Tolleson, AZ 85353
480-630-3022

Rome, NY
6168 State Route 233
P.O. Box 4141
Rome, NY 13442
315-371-4330

Salt Lake City, UT
1155 West 2300 North
P.O. Box 16027
Salt Lake City, UT 84116
385-715-2952

San Antonio, TX
8677 I-10 East
P.O. Box 69
Converse, TX 78109
210-888-9768

ENERGY STAR PARTNER

July 22, 2019 / Rev 00.02