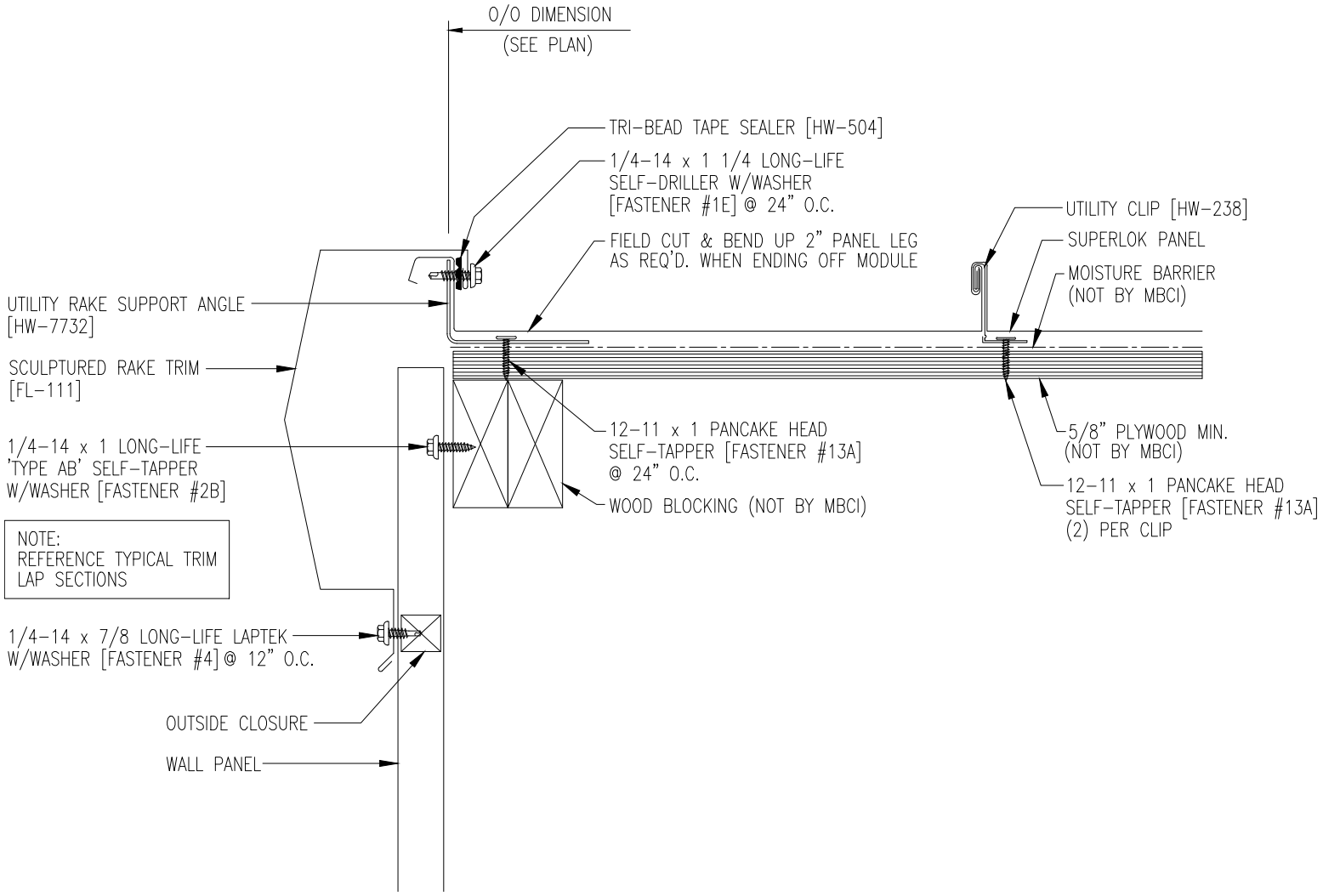
O/O DIMENSION
(SEE PLAN)
TRI-BEAD TAPE SEALER [HW-504]
1/4-14 x 1 1/4 LONG-LIFE
SELF-DRILLER W/WASHER
[FASTENER #1E] @ 24" O.C.
FIELD CUT & BEND UP 2" PANEL LEG
AS REQ'D. WHEN ENDING OFF MODULE
UTILITY CLIP [HW-238]
SUPERLOK PANEL
MOISTURE BARRIER
(NOT BY MBCI)
UTILITY RAKE SUPPORT ANGLE
[HW-7732]
SCULPTURED RAKE TRIM
[FL-111]
1/4-14 x 1 LONG-LIFE
'TYPE AB' SELF-TAPPER
W/WASHER [FASTENER #2B]
12-11 x 1 PANCAKE HEAD
SELF-TAPPER [FASTENER #13A]
@ 24" O.C.
WOOD BLOCKING (NOT BY MBCI)
5/8" PLYWOOD MIN.
(NOT BY MBCI)
12-11 x 1 PANCAKE HEAD
SELF-TAPPER [FASTENER #13A]
(2) PER CLIP
NOTE:
REFERENCE TYPICAL TRIM
LAP SECTIONS
1/4-14 x 7/8 LONG-LIFE LAPTEK
W/WASHER [FASTENER #4] @ 12" O.C.
OUTSIDE CLOSURE
WALL PANEL