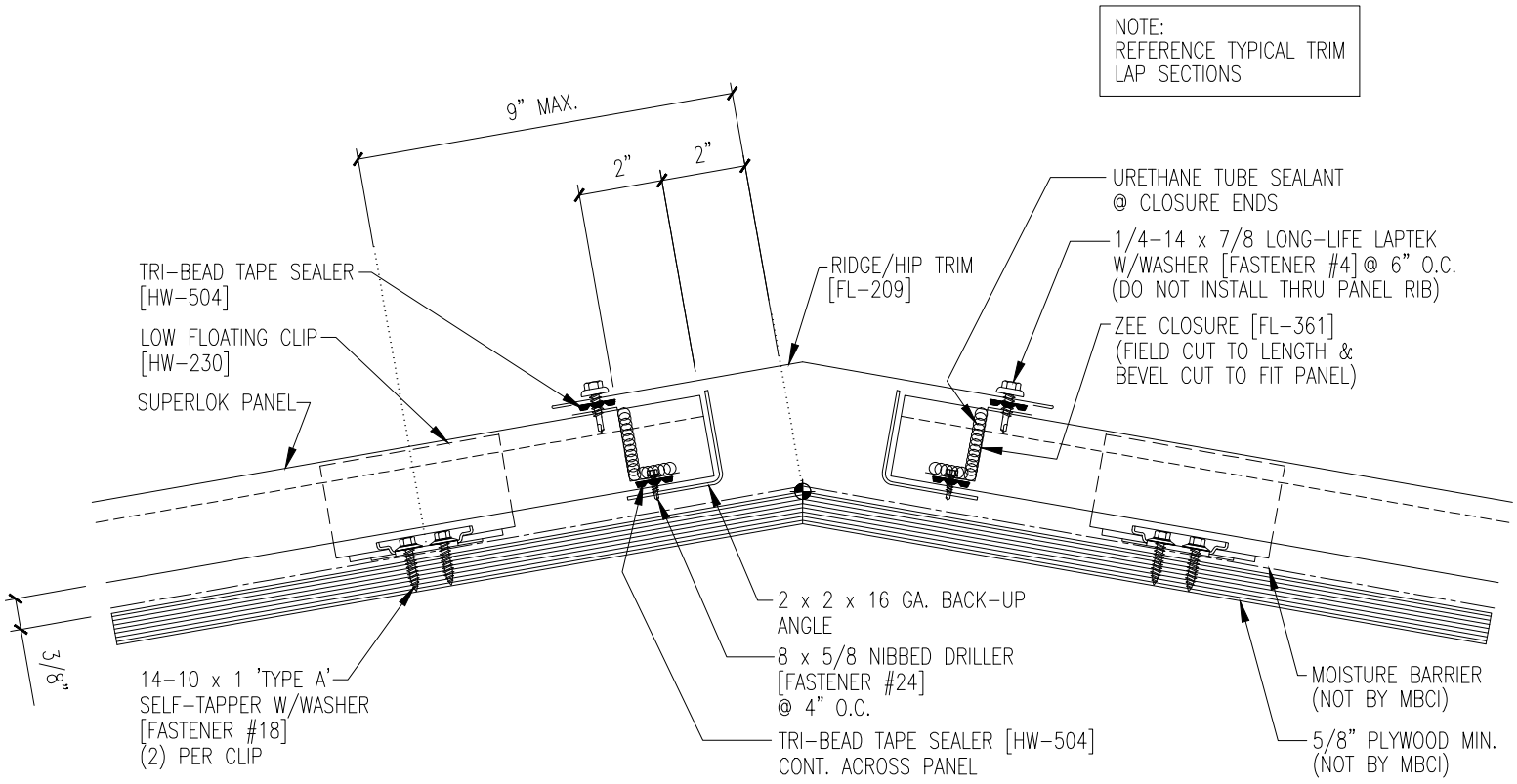
NOTE:
REFERENCE TYPICAL TRIM
LAP SECTIONS
9" MAX.
2"
2"
URETHANE TUBE SEALANT
@ CLOSURE ENDS
1/4-14 x 7/8 LONG-LIFE LAPTEK
W/WASHER [FASTENER #4] @ 6" O.C.
(DO NOT INSTALL THRU PANEL RIB)
TRI-BEAD TAPE SEALER
[HW-504]
RIDGE/HIP TRIM
[FL-209]
ZEE CLOSURE [FL-361]
(FIELD CUT TO LENGTH &
BEVEL CUT TO FIT PANEL)
LOW FLOATING CLIP
[HW-230]
SUPERLOK PANEL
2 x 2 x 16 GA. BACK-UP
ANGLE
3/8"
8 x 5/8 NIBBED DRILLER
[FASTENER #24]
@ 4" O.C.
14-10 x 1 'TYPE A'
SELF-TAPPER W/WASHER
[FASTENER #18]
(2) PER CLIP
TRI-BEAD TAPE SEALER [HW-504]
CONT. ACROSS PANEL
MOISTURE BARRIER
(NOT BY MBCI)
5/8" PLYWOOD MIN.
(NOT BY MBCI)