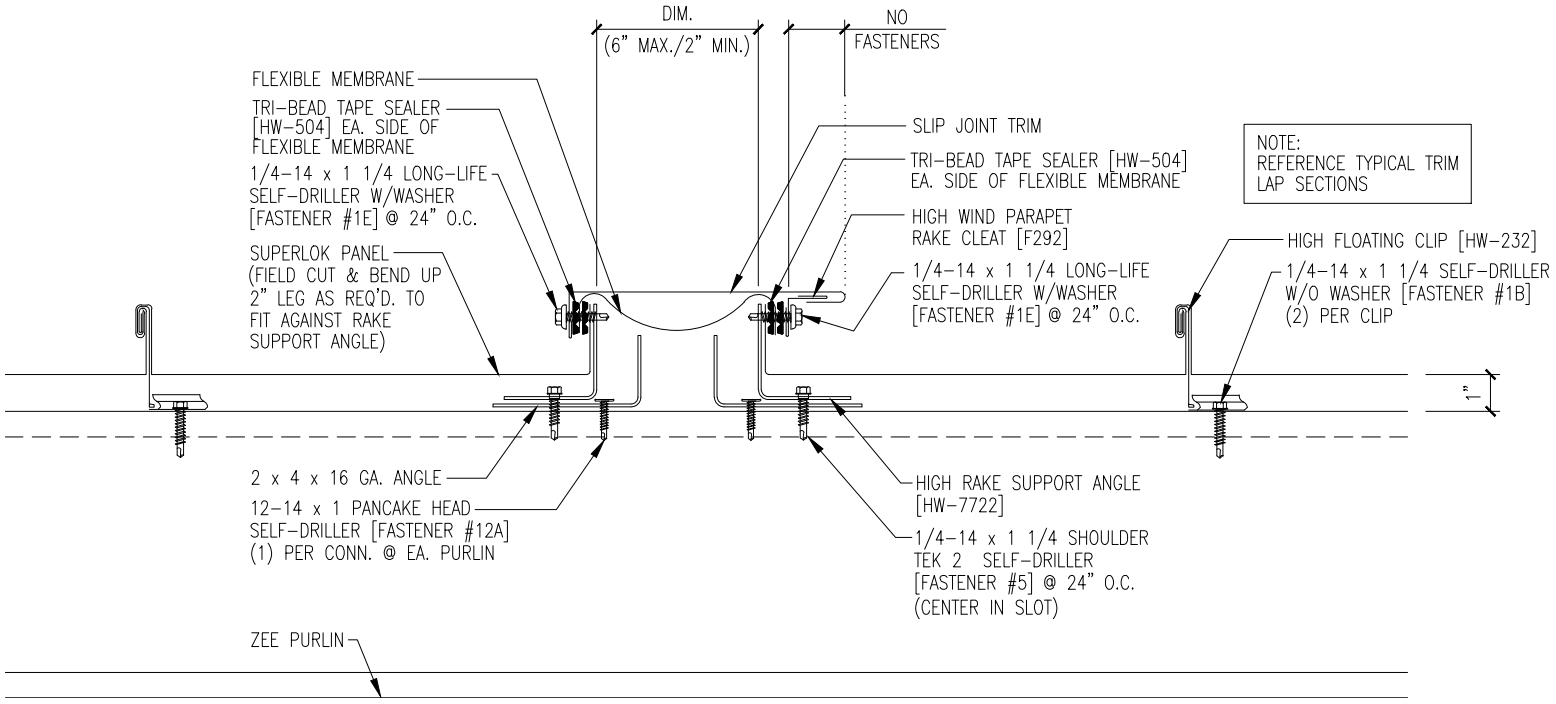
DIM.
(6" MAX./2" MIN.)
NO
FASTENERS
FLEXIBLE MEMBRANE
TRI-BEAD TAPE SEALER [HW-504] EA. SIDE OF FLEXIBLE MEMBRANE
1/4-14 x 1 1/4 LONG-LIFE SELF-DRILLER W/WASHER [FASTENER #1E] @ 24" O.C.
SUPERLOK PANEL (FIELD CUT & BEND UP 2" LEG AS REQ'D. TO FIT AGAINST RAKE SUPPORT ANGLE)
SLIP JOINT TRIM
TRI-BEAD TAPE SEALER [HW-504] EA. SIDE OF FLEXIBLE MEMBRANE
HIGH WIND PARAPET RAKE CLEAT [F292]
1/4-14 x 1 1/4 LONG-LIFE SELF-DRILLER W/WASHER [FASTENER #1E] @ 24" O.C.
NOTE: REFERENCE TYPICAL TRIM LAP SECTIONS
HIGH FLOATING CLIP [HW-232]
1/4-14 x 1 1/4 SELF-DRILLER W/O WASHER [FASTENER #1B] (2) PER CLIP
1"
2 x 4 x 16 GA. ANGLE
12-14 x 1 PANCAKE HEAD SELF-DRILLER [FASTENER #12A] (1) PER CONN. @ EA. PURLIN
HIGH RAKE SUPPORT ANGLE [HW-7722]
1/4-14 x 1 1/4 SHOULDER TEK 2 SELF-DRILLER [FASTENER #5] @ 24" O.C. (CENTER IN SLOT)
ZEE PURLIN