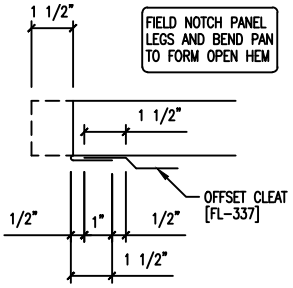

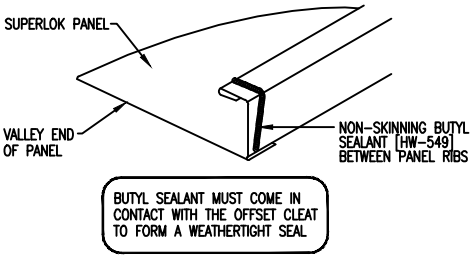

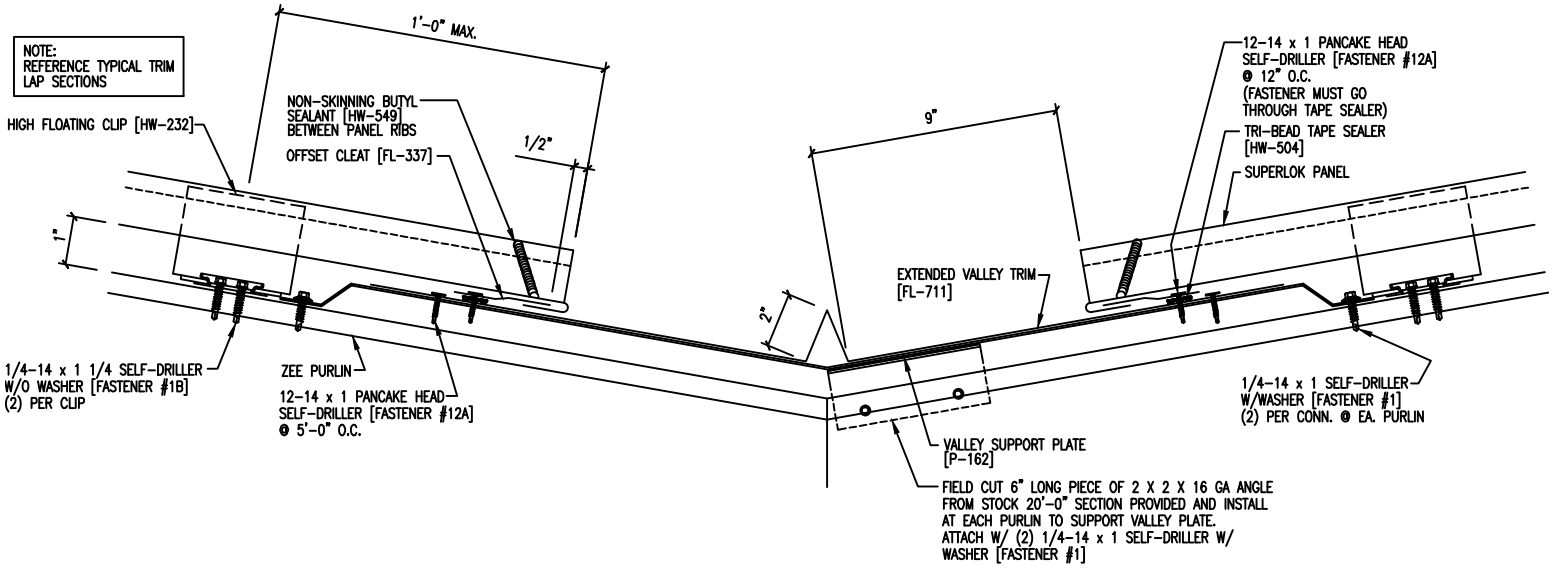

NOTE:
DO NOT USE THIS DETAIL ON ROOF SLOPES LESS THAN 3:12 OR IN AREAS W/ SNOW LOADS 10 PSF OR GREATER