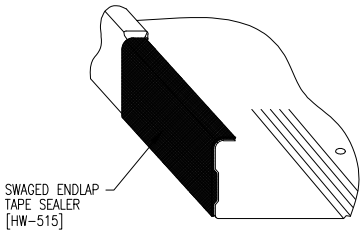

VIEW "A"

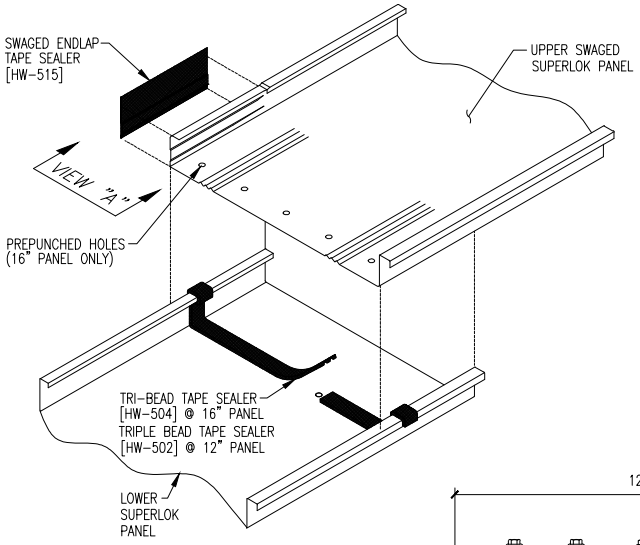

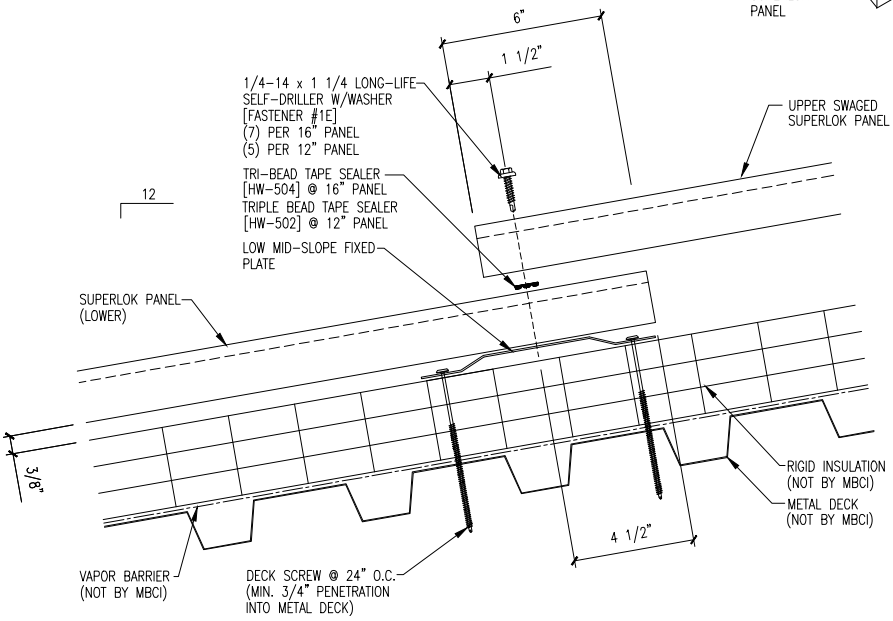

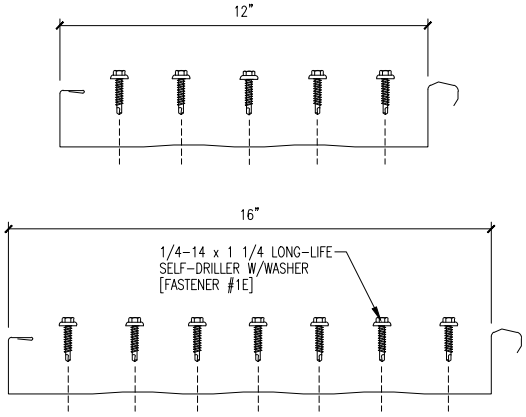

FASTENER LOCATIONS