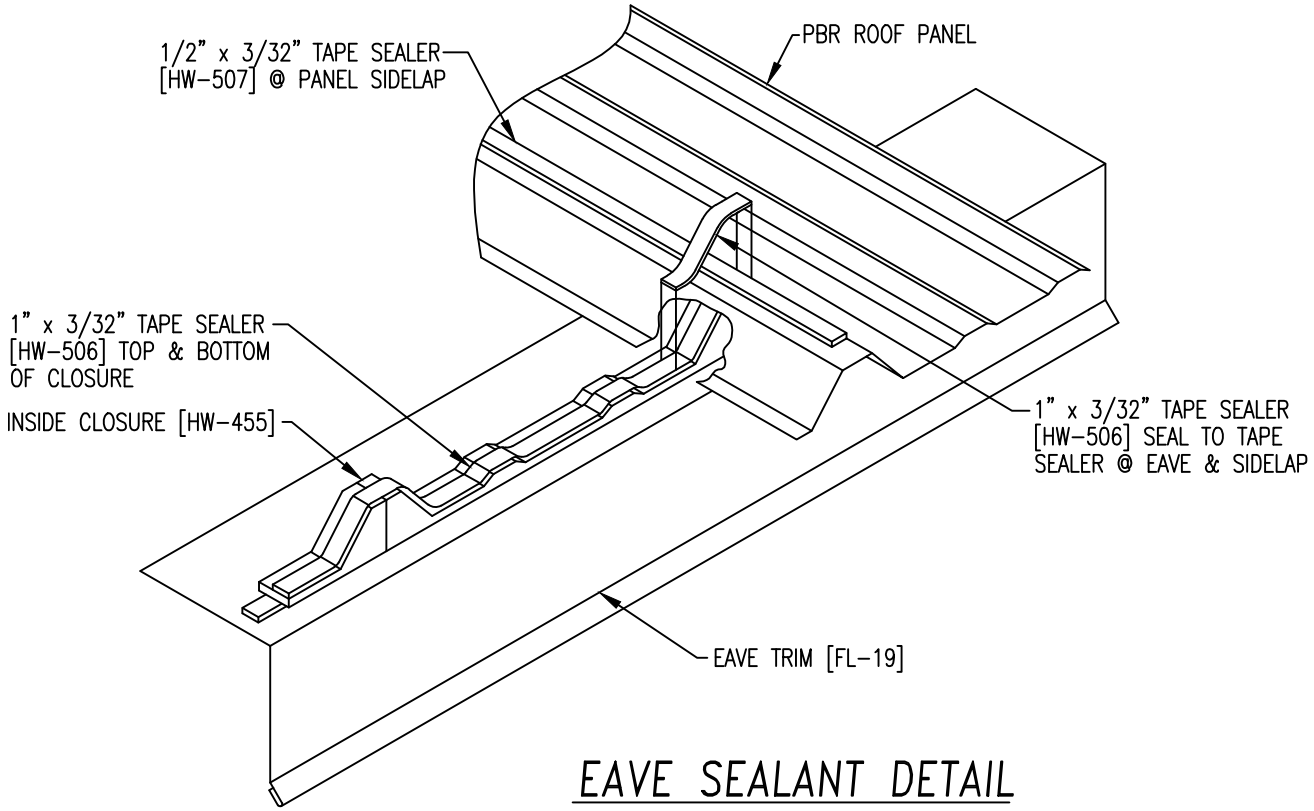
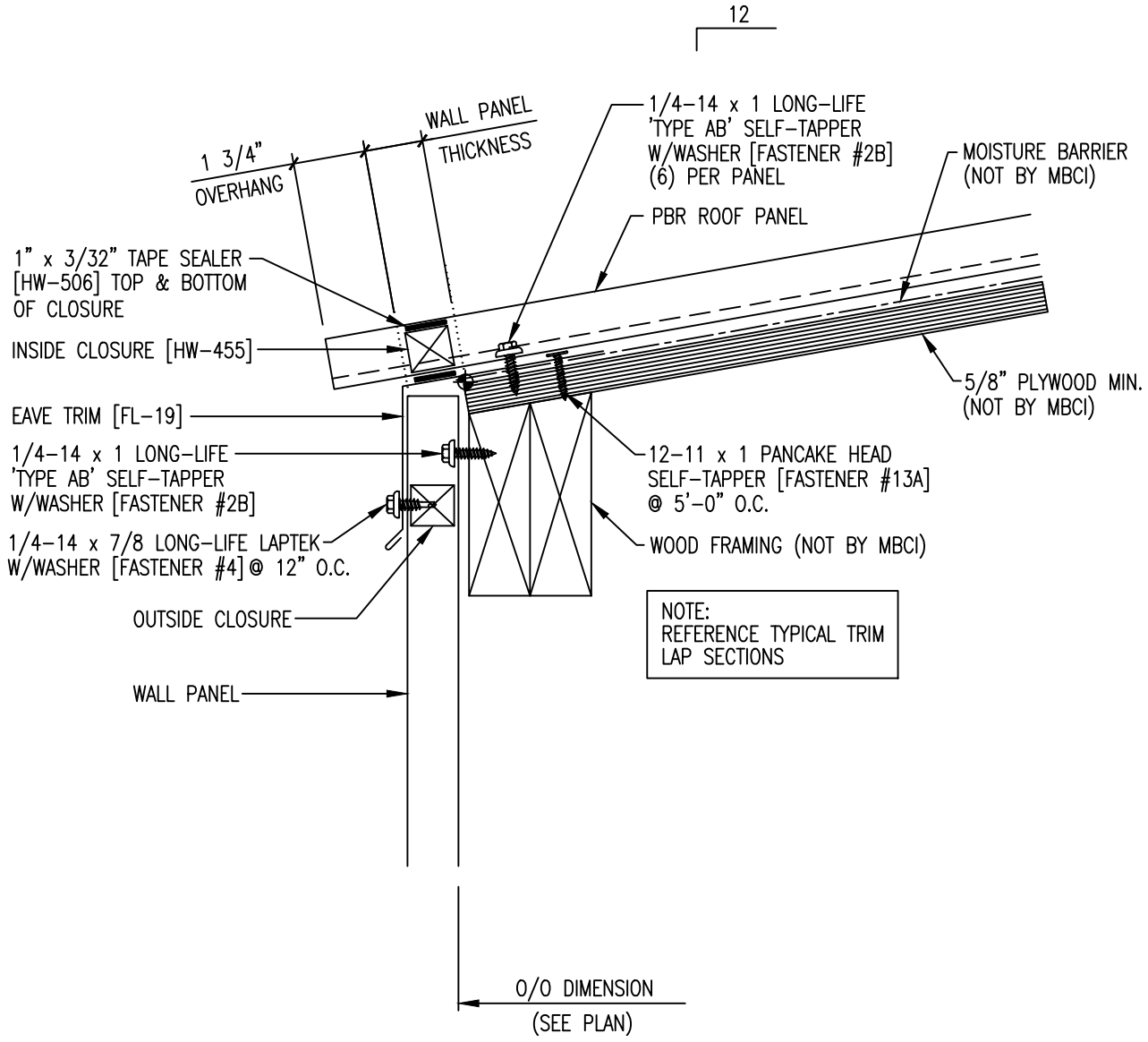
EAVE SEALANT DETAIL