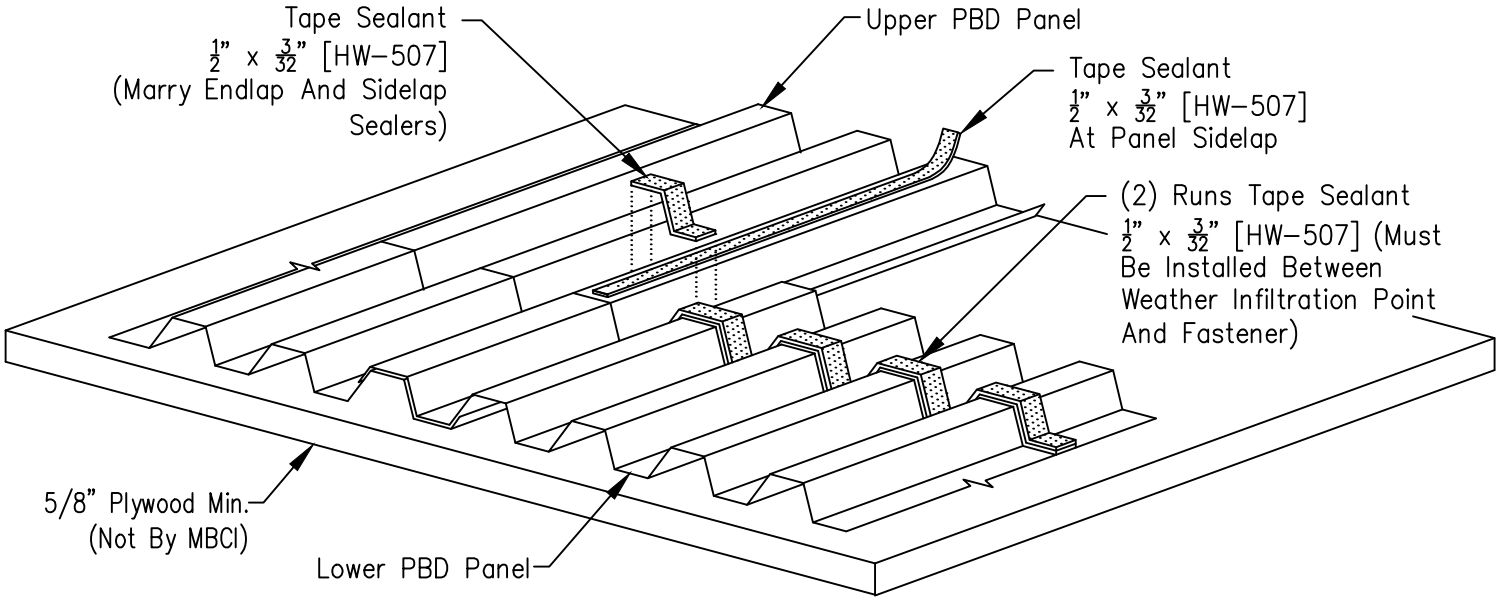

Endlap Sealant Detail

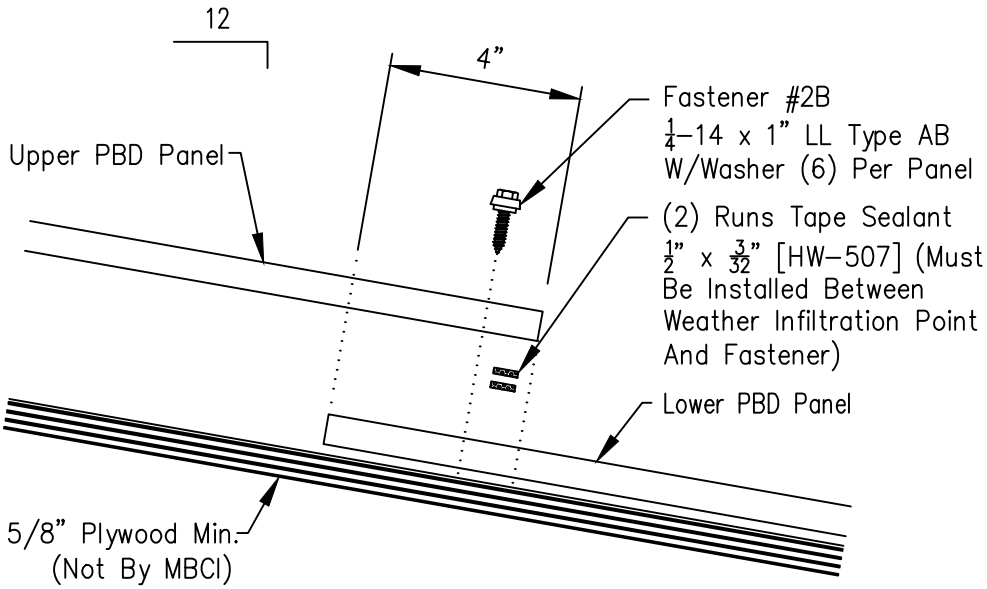

Endlap

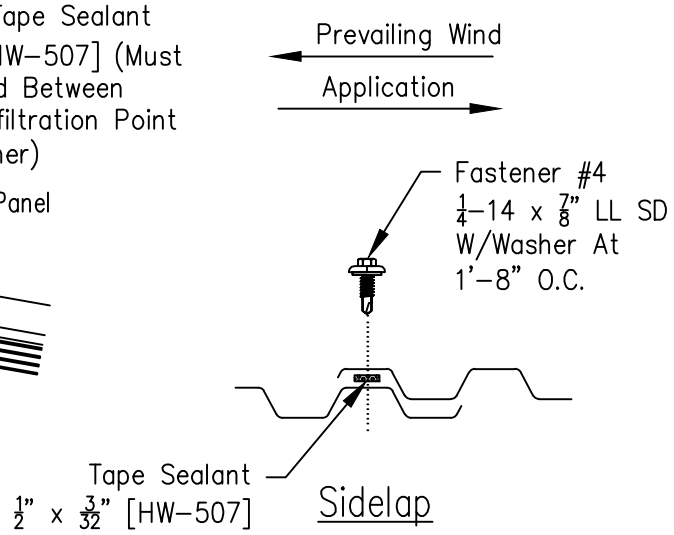

Sidelap