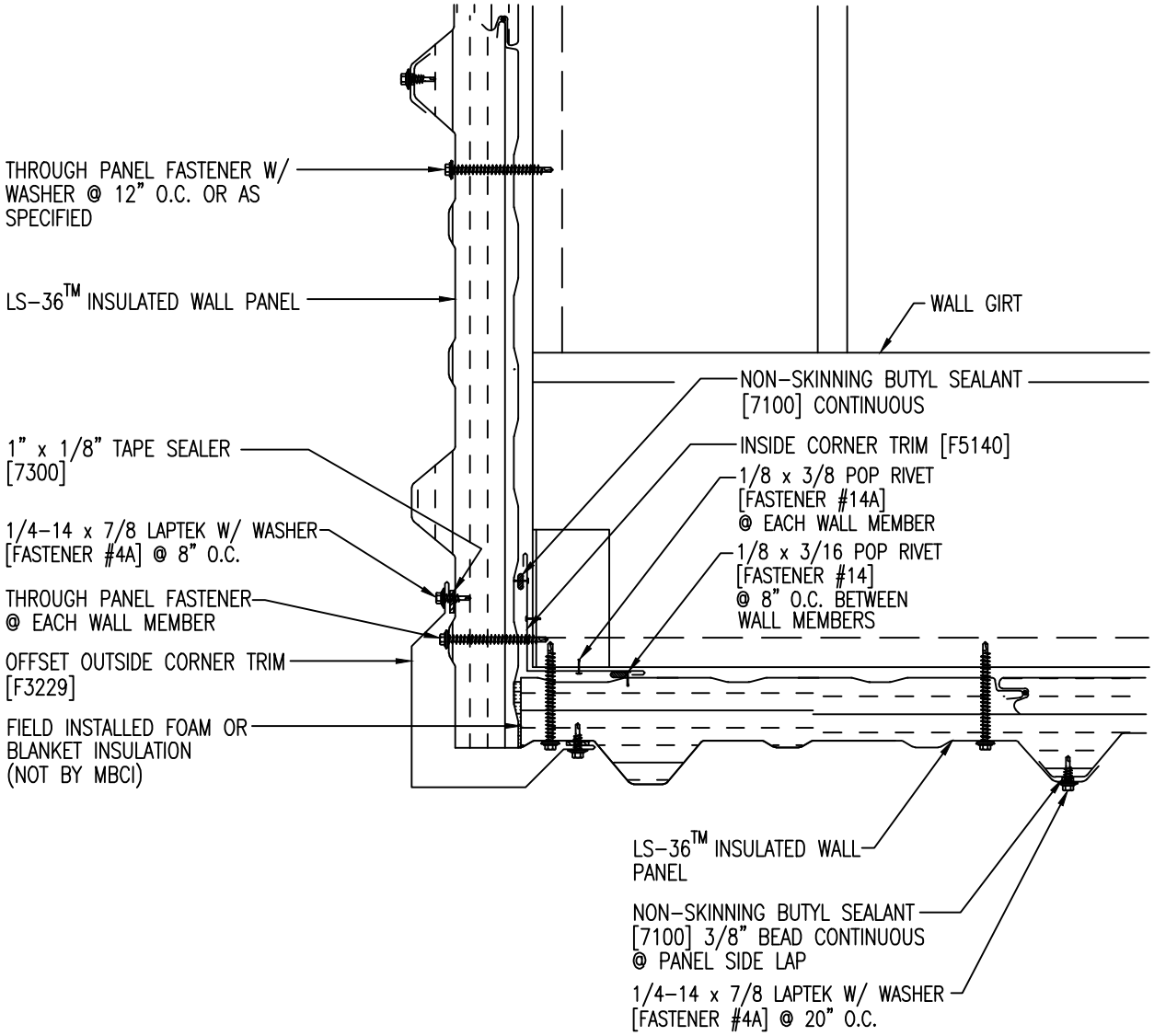

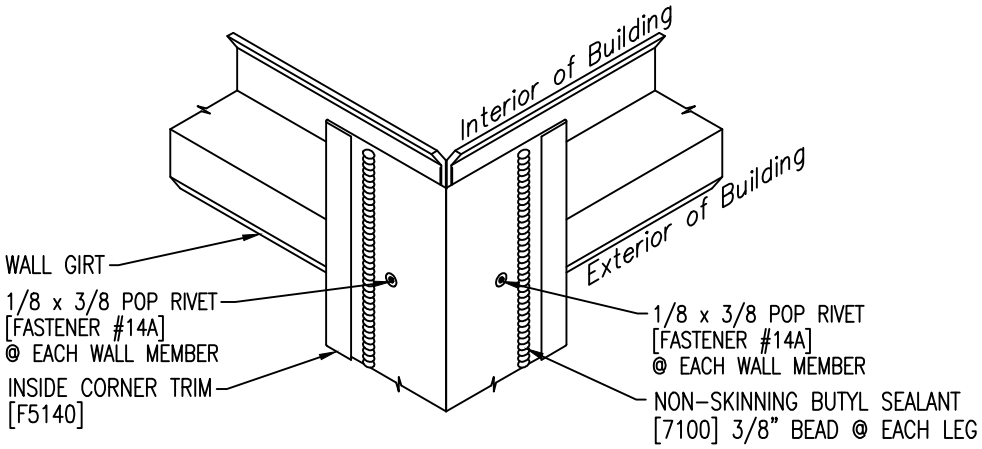

CORNER FRAMING & SEALANT AT INSIDE CORNER TRIM