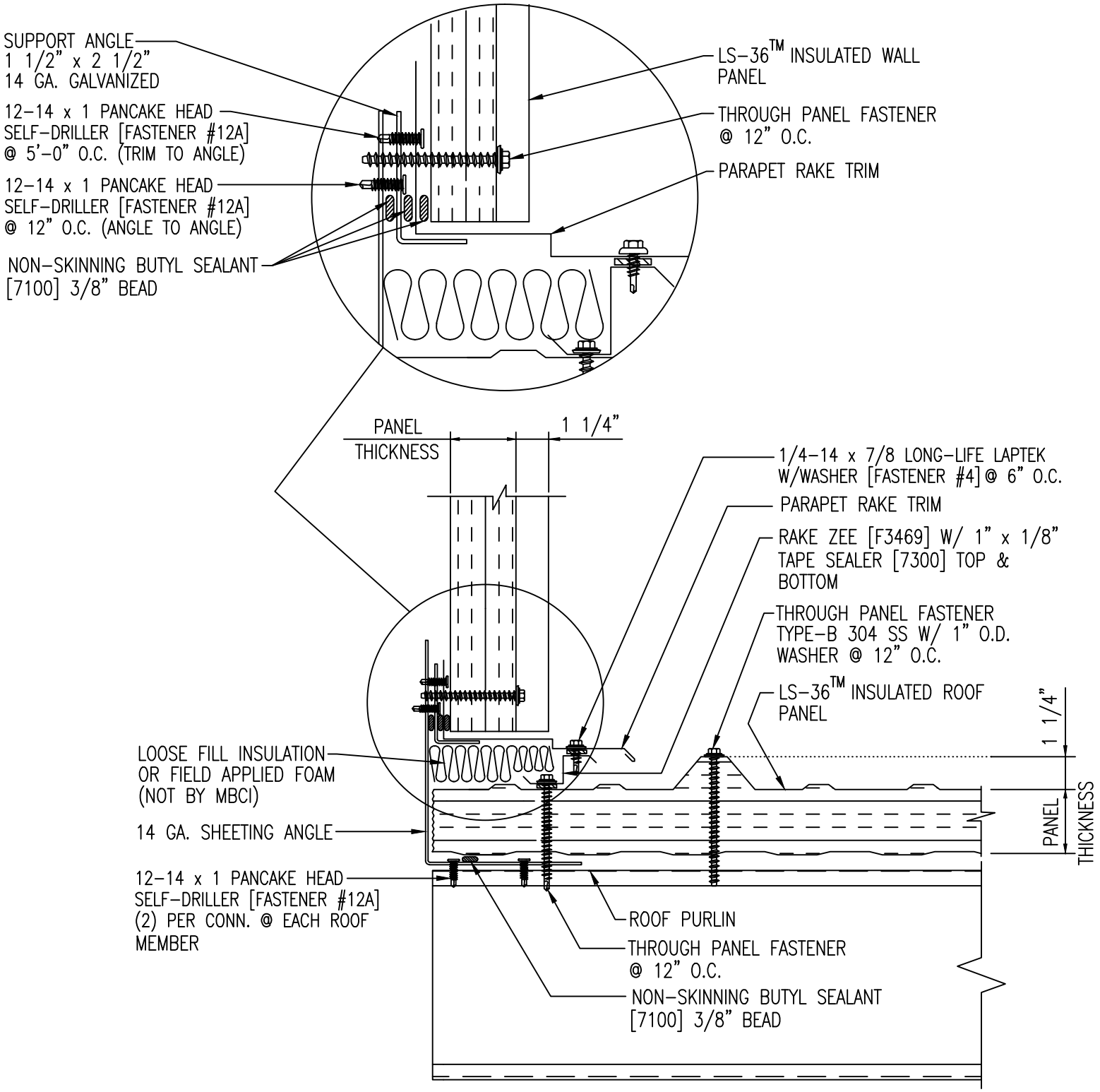
SUPPORT ANGLE
1 1/2" x 2 1/2"
14 GA. GALVANIZED
12-14 x 1 PANCAKE HEAD
SELF-DRILLER [FASTENER #12A]
@ 5'-0" O.C. (TRIM TO ANGLE)
12-14 x 1 PANCAKE HEAD
SELF-DRILLER [FASTENER #12A]
@ 12" O.C. (ANGLE TO ANGLE)
NON-SKINNING BUTYL SEALANT
[7100] 3/8" BEAD
LS-36™ INSULATED WALL
PANEL
THROUGH PANEL FASTENER
@ 12" O.C.
PARAPET RAKE TRIM
PANEL
THICKNESS
1 1/4"
1/4-14 x 7/8 LONG-LIFE LAPTEK
W/WASHER [FASTENER #4] @ 6" O.C.
PARAPET RAKE TRIM
RAKE ZEE [F3469] W/ 1" x 1/8"
TAPE SEALER [7300] TOP &
BOTTOM
THROUGH PANEL FASTENER
TYPE-B 304 SS W/ 1" O.D.
WASHER @ 12" O.C.
LS-36™ INSULATED ROOF
PANEL
1 1/4"
PANEL
THICKNESS
LOOSE FILL INSULATION
OR FIELD APPLIED FOAM
(NOT BY MBCI)
14 GA. SHEETING ANGLE
12-14 x 1 PANCAKE HEAD
SELF-DRILLER [FASTENER #12A]
(2) PER CONN. @ EACH ROOF
MEMBER
ROOF PURLIN
THROUGH PANEL FASTENER
@ 12" O.C.
NON-SKINNING BUTYL SEALANT
[7100] 3/8" BEAD