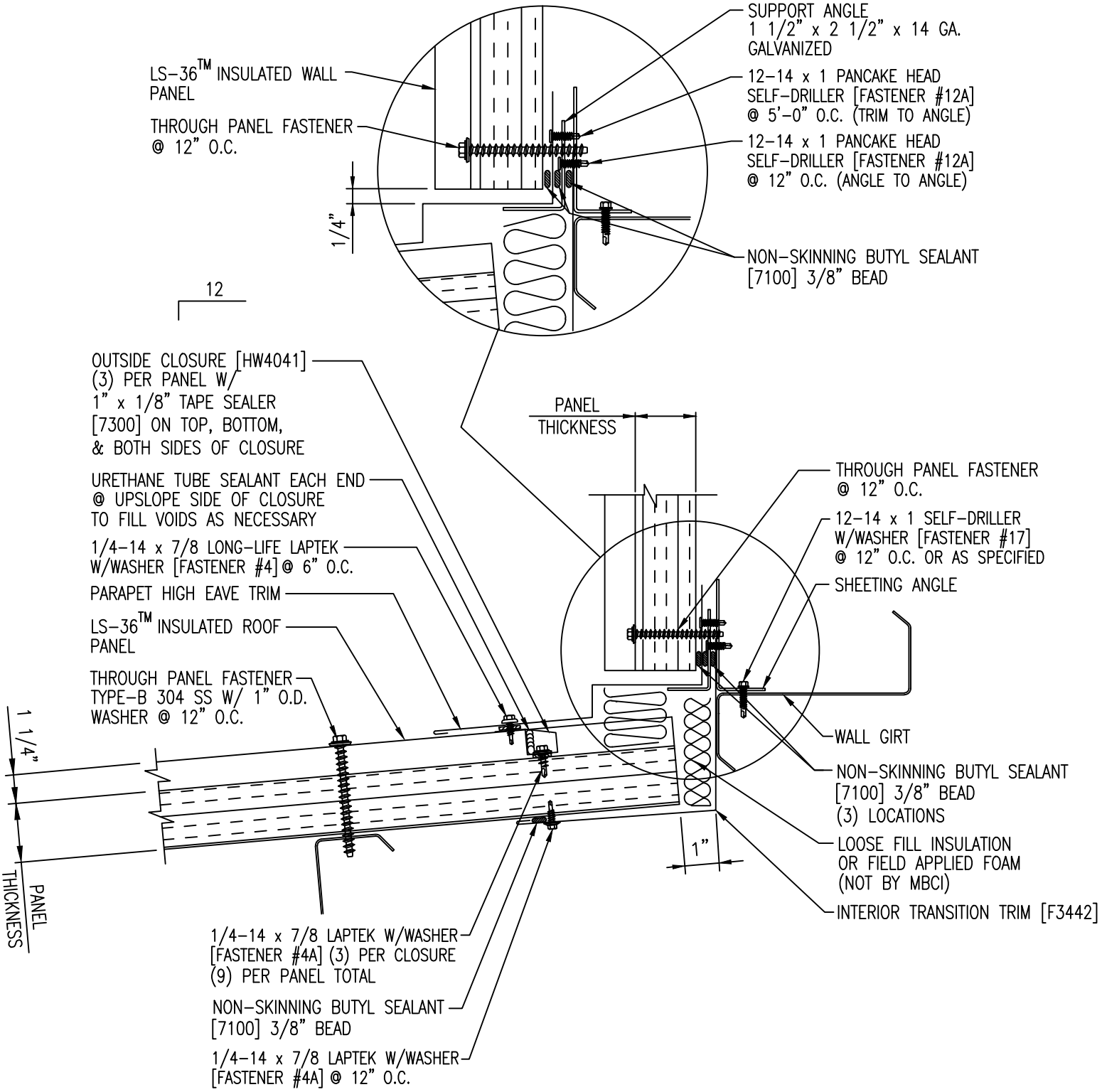
SUPPORT ANGLE
1 1/2" x 2 1/2" x 14 GA.
GALVANIZED
LS-36™ INSULATED WALL PANEL
12-14 x 1 PANCAKE HEAD SELF-DRILLER [FASTENER #12A] @ 5'-0" O.C. (TRIM TO ANGLE)
THROUGH PANEL FASTENER @ 12" O.C.
12-14 x 1 PANCAKE HEAD SELF-DRILLER [FASTENER #12A] @ 12" O.C. (ANGLE TO ANGLE)
1/4"
NON-SKINNING BUTYL SEALANT [7100] 3/8" BEAD
12
OUTSIDE CLOSURE [HW4041] (3) PER PANEL W/ 1" x 1/8" TAPE SEALER [7300] ON TOP, BOTTOM, & BOTH SIDES OF CLOSURE
PANEL THICKNESS
THROUGH PANEL FASTENER @ 12" O.C.
URETHANE TUBE SEALANT EACH END @ UPSLOPE SIDE OF CLOSURE TO FILL VOIDS AS NECESSARY
12-14 x 1 SELF-DRILLER W/WASHER [FASTENER #17] @ 12" O.C. OR AS SPECIFIED
1/4-14 x 7/8 LONG-LIFE LAPTEK W/WASHER [FASTENER #4] @ 6" O.C.
SHEETING ANGLE
PARAPET HIGH EAVE TRIM
LS-36™ INSULATED ROOF PANEL
THROUGH PANEL FASTENER TYPE-B 304 SS W/ 1" O.D. WASHER @ 12" O.C.
1 1/4"
WALL GIRT
NON-SKINNING BUTYL SEALANT [7100] 3/8" BEAD (3) LOCATIONS
1"
LOOSE FILL INSULATION OR FIELD APPLIED FOAM (NOT BY MBCI)
INTERIOR TRANSITION TRIM [F3442]
PANEL THICKNESS
1/4-14 x 7/8 LAPTEK W/WASHER [FASTENER #4A] (3) PER CLOSURE (9) PER PANEL TOTAL
NON-SKINNING BUTYL SEALANT [7100] 3/8" BEAD
1/4-14 x 7/8 LAPTEK W/WASHER [FASTENER #4A] @ 12" O.C.