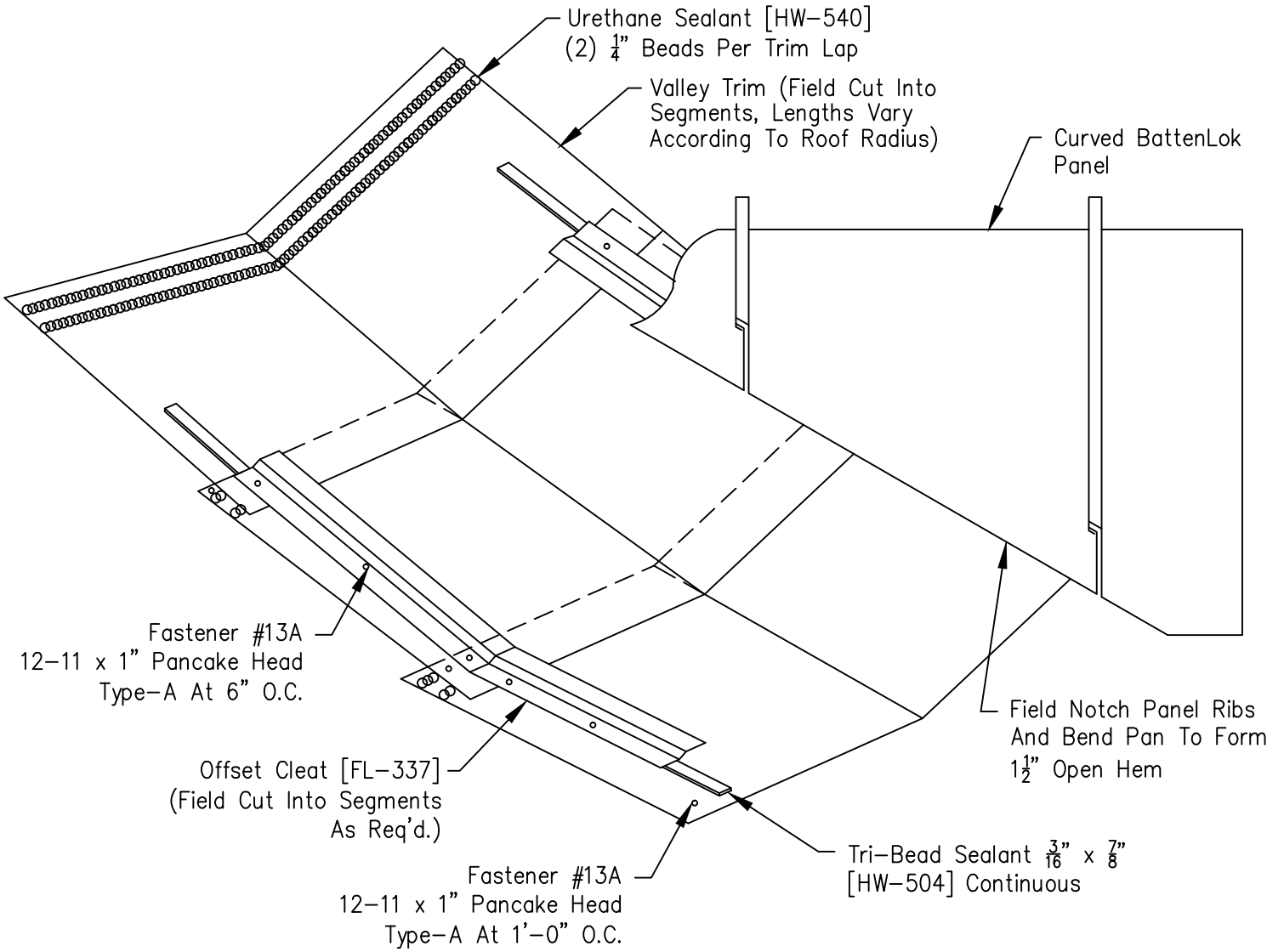
Urethane Sealant [HW–540]
(2) 1/4" Beads Per Trim Lap
Valley Trim (Field Cut Into Segments, Lengths Vary According To Roof Radius)
Curved BattenLok Panel
Fastener #13A
12–11 x 1" Pancake Head
Type–A At 6" O.C.
Offset Cleat [FL–337]
(Field Cut Into Segments As Req'd.)
Fastener #13A
12–11 x 1" Pancake Head
Type–A At 1'–0" O.C.
Field Notch Panel Ribs And Bend Pan To Form 1 1/2" Open Hem
Tri–Bead Sealant 3/16" x 7/8"
[HW–504] Continuous

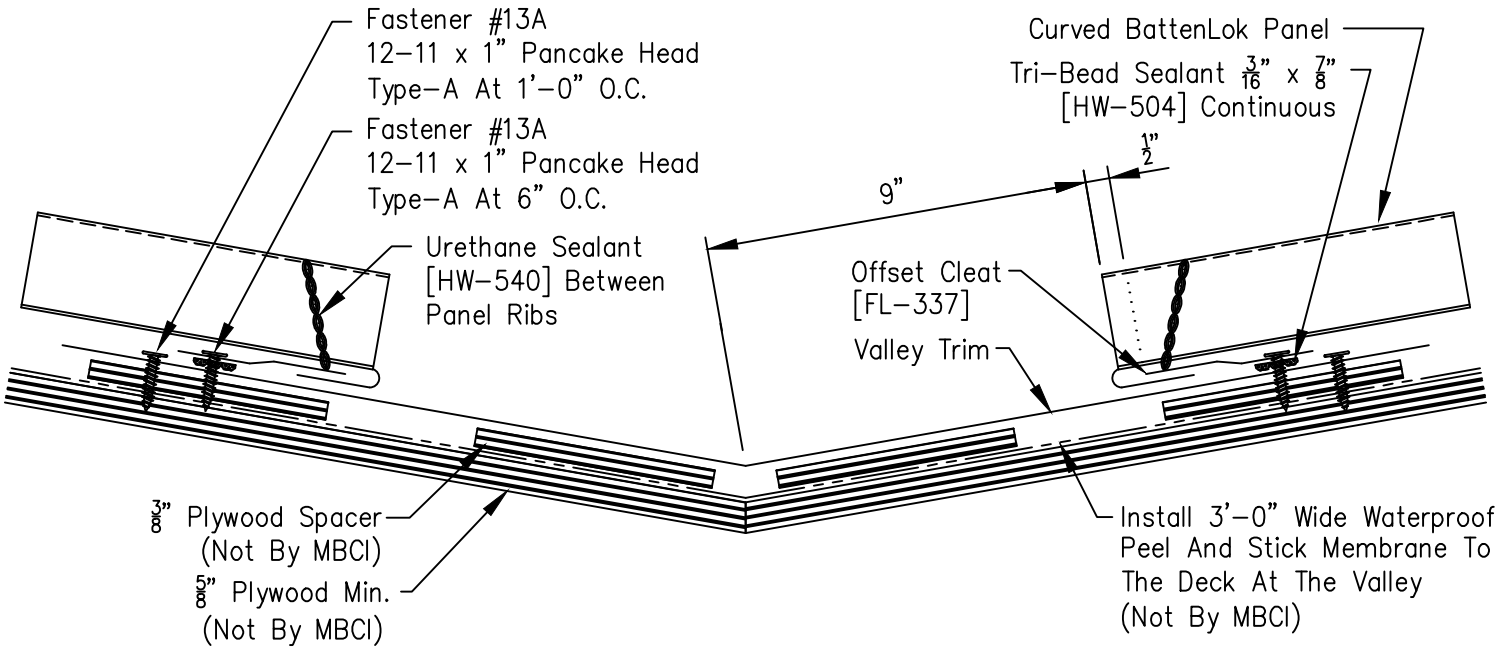
Fastener #13A
12–11 x 1" Pancake Head
Type–A At 1'–0" O.C.
Fastener #13A
12–11 x 1" Pancake Head
Type–A At 6" O.C.
Urethane Sealant
[HW–540] Between
Panel Ribs
Curved BattenLok Panel
Tri–Bead Sealant 3/16" x 7/8"
[HW–504] Continuous
1/2"
9"
Offset Cleat
[FL–337]
Valley Trim
3/8" Plywood Spacer
(Not By MBCI)
5/8" Plywood Min.
(Not By MBCI)
Install 3'–0" Wide Waterproof
Peel And Stick Membrane To
The Deck At The Valley
(Not By MBCI)