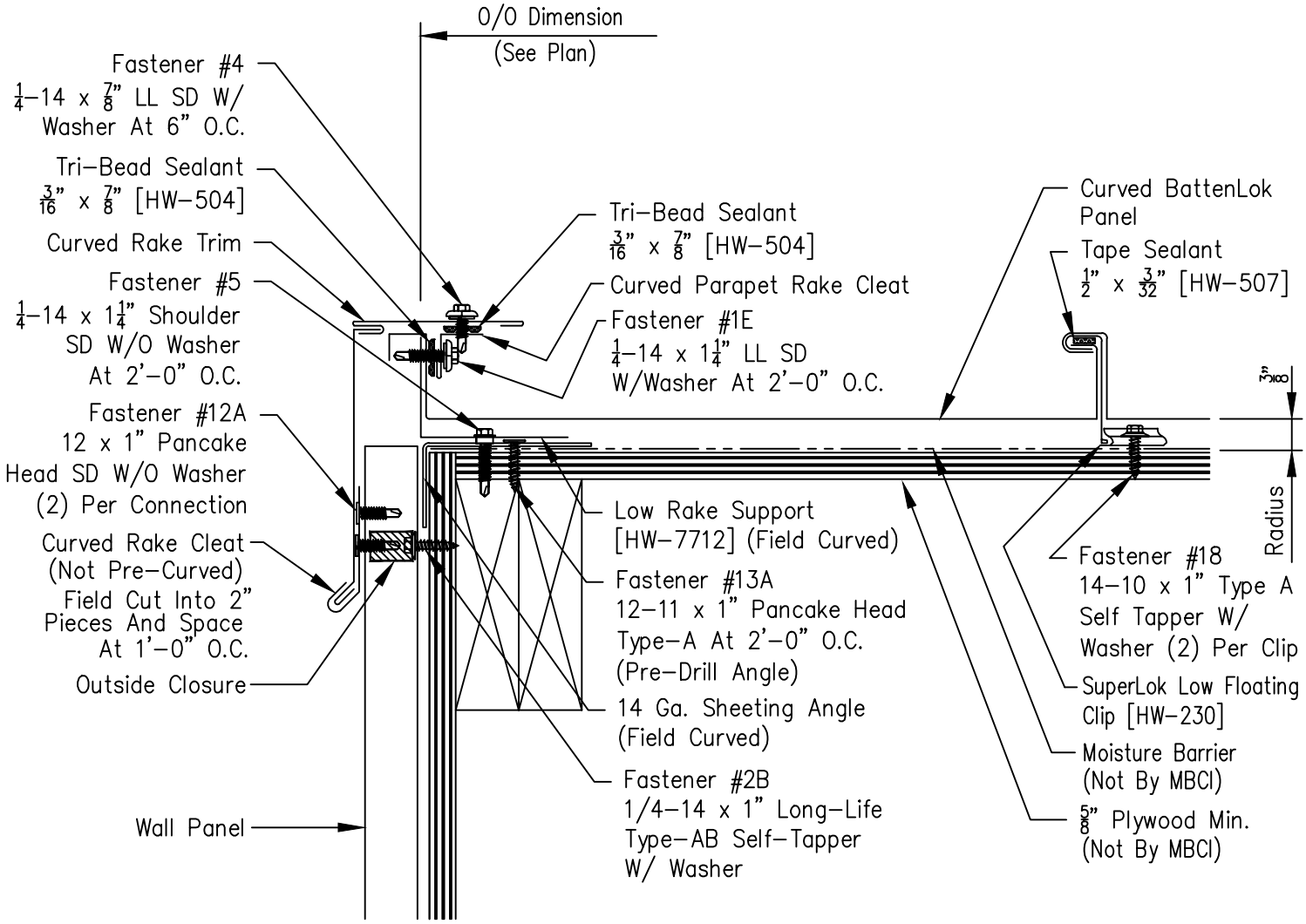
O/O Dimension
(See Plan)
Fastener #4
$\frac{1}{4}$–14 x $\frac{7}{8}$" LL SD W/
Washer At 6" O.C.
Tri–Bead Sealant
$\frac{3}{16}$" x $\frac{7}{8}$" [HW–504]
Curved Rake Trim
Fastener #5
$\frac{1}{4}$–14 x $1\frac{1}{4}$" Shoulder
SD W/O Washer
At 2'–0" O.C.
Fastener #12A
12 x 1" Pancake
Head SD W/O Washer
(2) Per Connection
Curved Rake Cleat
(Not Pre–Curved)
Field Cut Into 2"
Pieces And Space
At 1'–0" O.C.
Outside Closure
Wall Panel
Tri–Bead Sealant
$\frac{3}{16}$" x $\frac{7}{8}$" [HW–504]
Curved Parapet Rake Cleat
Fastener #1E
$\frac{1}{4}$–14 x $1\frac{1}{4}$" LL SD
W/Washer At 2'–0" O.C.
Low Rake Support
[HW–7712] (Field Curved)
Fastener #13A
12–11 x 1" Pancake Head
Type–A At 2'–0" O.C.
(Pre–Drill Angle)
14 Ga. Sheeting Angle
(Field Curved)
Fastener #2B
1/4–14 x 1" Long–Life
Type–AB Self–Tapper
W/ Washer
Curved BattenLok
Panel
Tape Sealant
$\frac{1}{2}$" x $\frac{3}{32}$" [HW–507]
$\frac{3}{8}$"
Radius
Fastener #18
14–10 x 1" Type A
Self Tapper W/
Washer (2) Per Clip
SuperLok Low Floating
Clip [HW–230]
Moisture Barrier
(Not By MBCI)
$\frac{5}{8}$" Plywood Min.
(Not By MBCI)