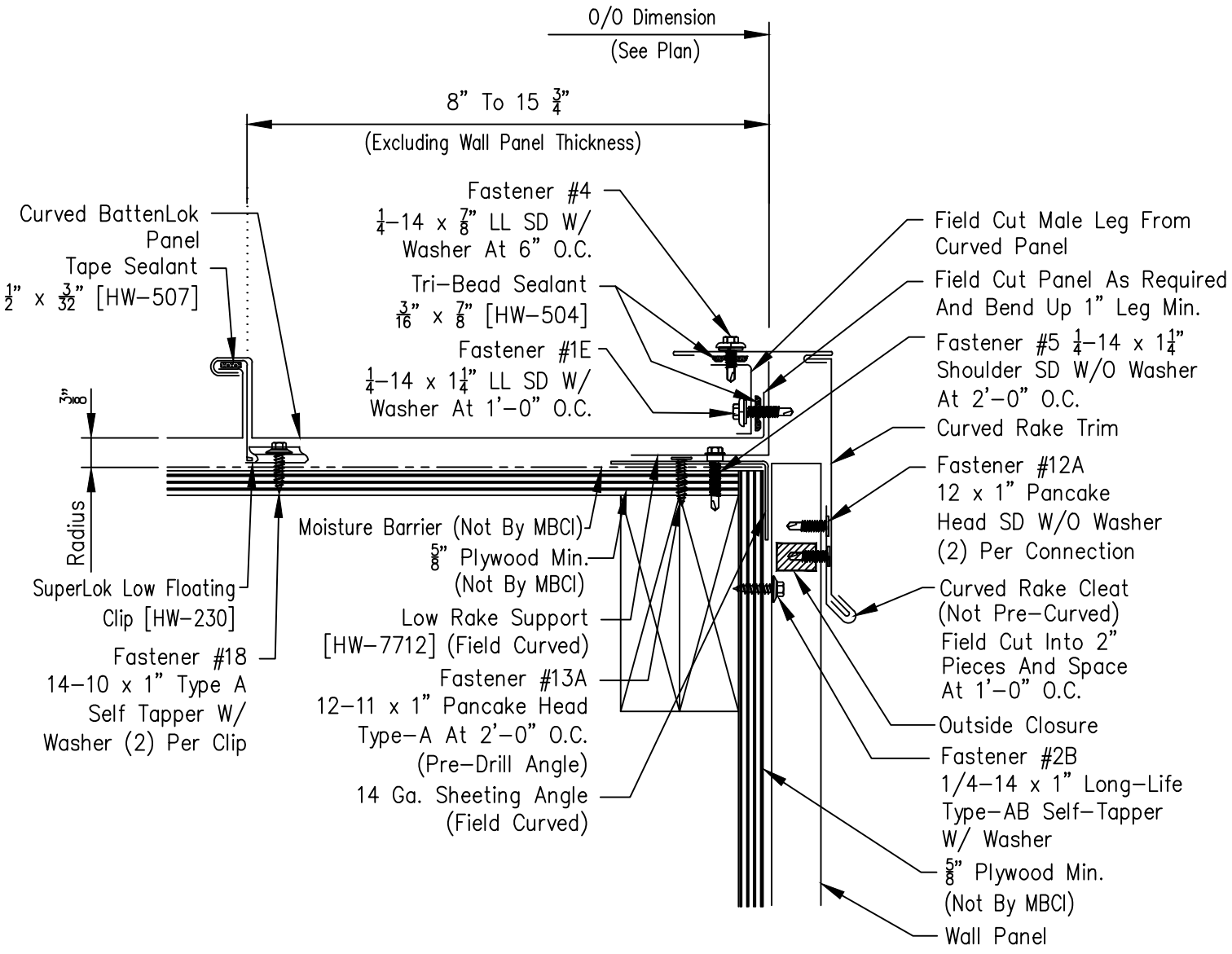
O/O Dimension
(See Plan)
8" To 15 3/4"
(Excluding Wall Panel Thickness)
Curved BattenLok Panel
Tape Sealant
1/2" x 3/32" [HW-507]
Fastener #4
1/4-14 x 7/8" LL SD W/ Washer At 6" O.C.
Tri-Bead Sealant
3/16" x 7/8" [HW-504]
Fastener #1E
1/4-14 x 1 1/4" LL SD W/ Washer At 1'-0" O.C.
3/8"
Radius
SuperLok Low Floating Clip [HW-230]
Fastener #18
14-10 x 1" Type A Self Tapper W/ Washer (2) Per Clip
Moisture Barrier (Not By MBCI)
5/8" Plywood Min. (Not By MBCI)
Low Rake Support [HW-7712] (Field Curved)
Fastener #13A
12-11 x 1" Pancake Head Type-A At 2'-0" O.C. (Pre-Drill Angle)
14 Ga. Sheeting Angle (Field Curved)
Field Cut Male Leg From Curved Panel
Field Cut Panel As Required And Bend Up 1" Leg Min.
Fastener #5 1/4-14 x 1 1/4" Shoulder SD W/O Washer At 2'-0" O.C.
Curved Rake Trim
Fastener #12A
12 x 1" Pancake Head SD W/O Washer (2) Per Connection
Curved Rake Cleat (Not Pre-Curved) Field Cut Into 2" Pieces And Space At 1'-0" O.C.
Outside Closure
Fastener #2B
1/4-14 x 1" Long-Life Type-AB Self-Tapper W/ Washer
5/8" Plywood Min. (Not By MBCI)
Wall Panel