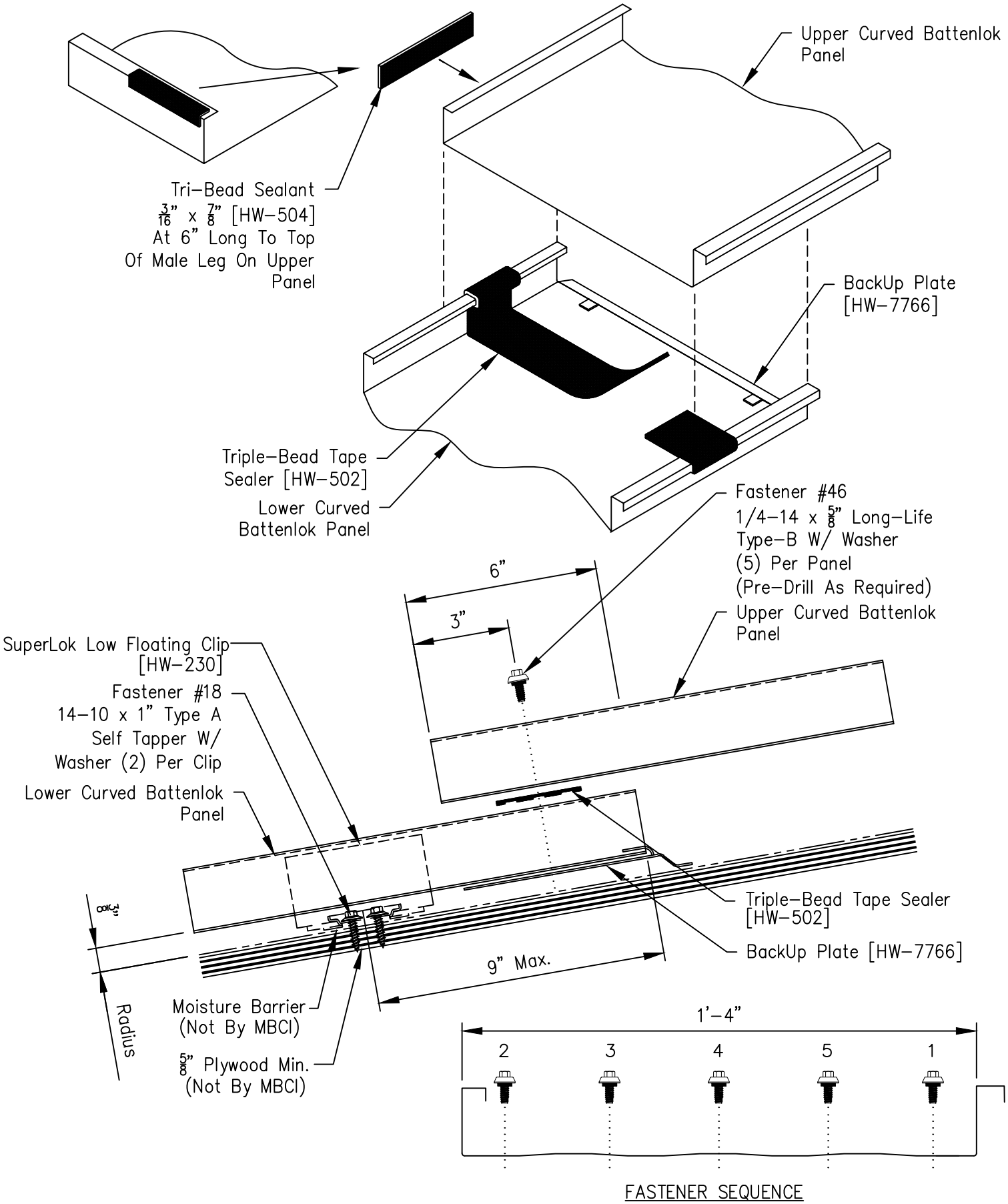
Upper Curved Battenlok Panel
Tri–Bead Sealant
3/16" x 7/8" [HW–504]
At 6" Long To Top
Of Male Leg On Upper
Panel
BackUp Plate
[HW–7766]
Triple–Bead Tape
Sealer [HW–502]
Lower Curved
Battenlok Panel
Fastener #46
1/4–14 x 5/8" Long–Life
Type–B W/ Washer
(5) Per Panel
(Pre–Drill As Required)
6"
3"
Upper Curved Battenlok
Panel
SuperLok Low Floating Clip
[HW–230]
Fastener #18
14–10 x 1" Type A
Self Tapper W/
Washer (2) Per Clip
Lower Curved Battenlok
Panel
Triple–Bead Tape Sealer
[HW–502]
BackUp Plate [HW–7766]
9" Max.
Radius
Moisture Barrier
(Not By MBCI)
5/8" Plywood Min.
(Not By MBCI)
1'–4"
2
3
4
5
1
FASTENER SEQUENCE