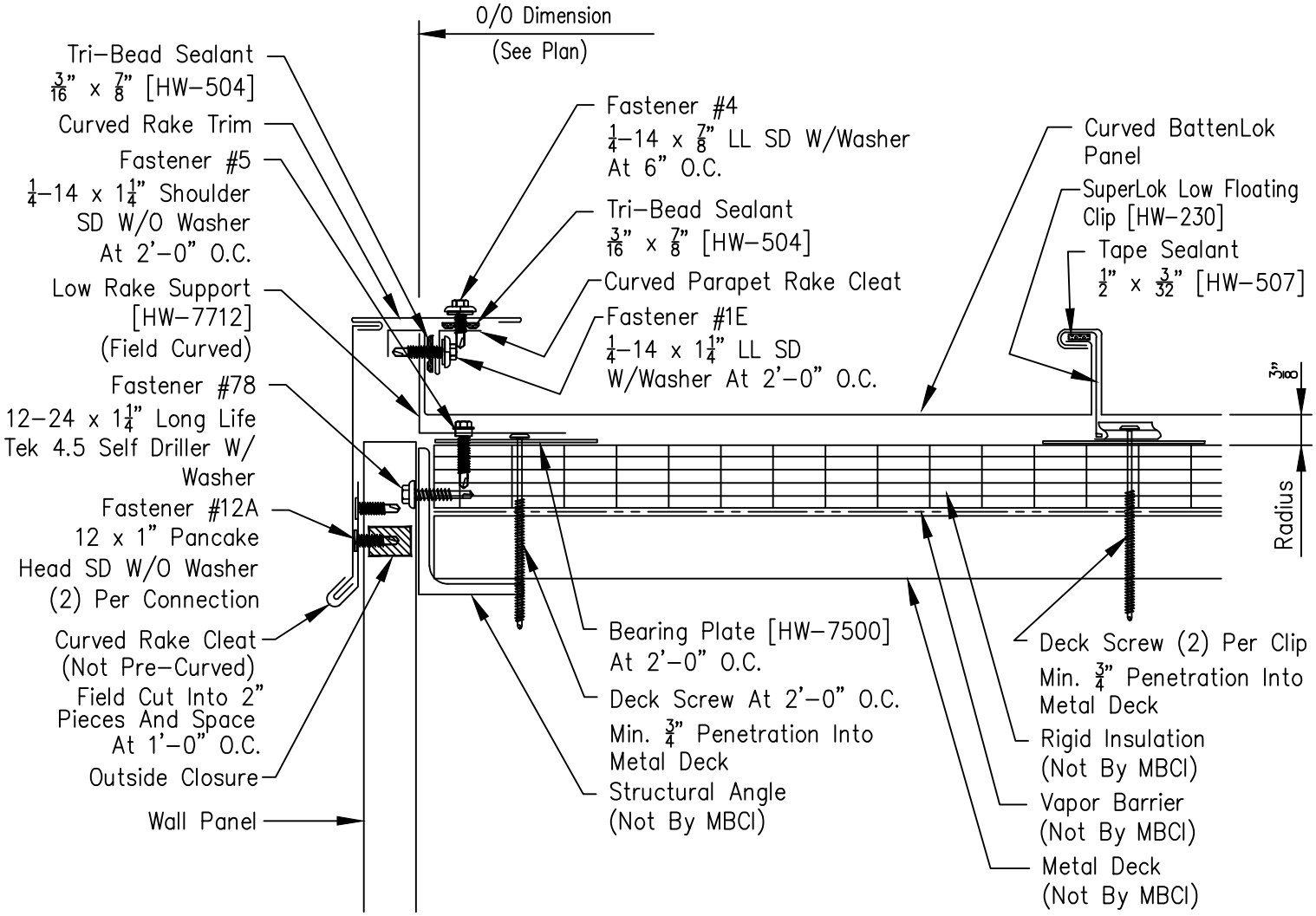
O/O Dimension
(See Plan)
Tri-Bead Sealant
3/16" x 7/8" [HW-504]
Curved Rake Trim
Fastener #5
1/4-14 x 1 1/4" Shoulder
SD W/O Washer
At 2'-0" O.C.
Low Rake Support
[HW-7712]
(Field Curved)
Fastener #78
12-24 x 1 1/4" Long Life
Tek 4.5 Self Driller W/
Washer
Fastener #12A
12 x 1" Pancake
Head SD W/O Washer
(2) Per Connection
Curved Rake Cleat
(Not Pre-Curved)
Field Cut Into 2"
Pieces And Space
At 1'-0" O.C.
Outside Closure
Wall Panel
Fastener #4
1/4-14 x 7/8" LL SD W/Washer
At 6" O.C.
Tri-Bead Sealant
3/16" x 7/8" [HW-504]
Curved Parapet Rake Cleat
Fastener #1E
1/4-14 x 1 1/4" LL SD
W/Washer At 2'-0" O.C.
Bearing Plate [HW-7500]
At 2'-0" O.C.
Deck Screw At 2'-0" O.C.
Min. 3/4" Penetration Into
Metal Deck
Structural Angle
(Not By MBCI)
Curved BattenLok
Panel
SuperLok Low Floating
Clip [HW-230]
Tape Sealant
1/2" x 3/32" [HW-507]
3/8"
Radius
Deck Screw (2) Per Clip
Min. 3/4" Penetration Into
Metal Deck
Rigid Insulation
(Not By MBCI)
Vapor Barrier
(Not By MBCI)
Metal Deck
(Not By MBCI)