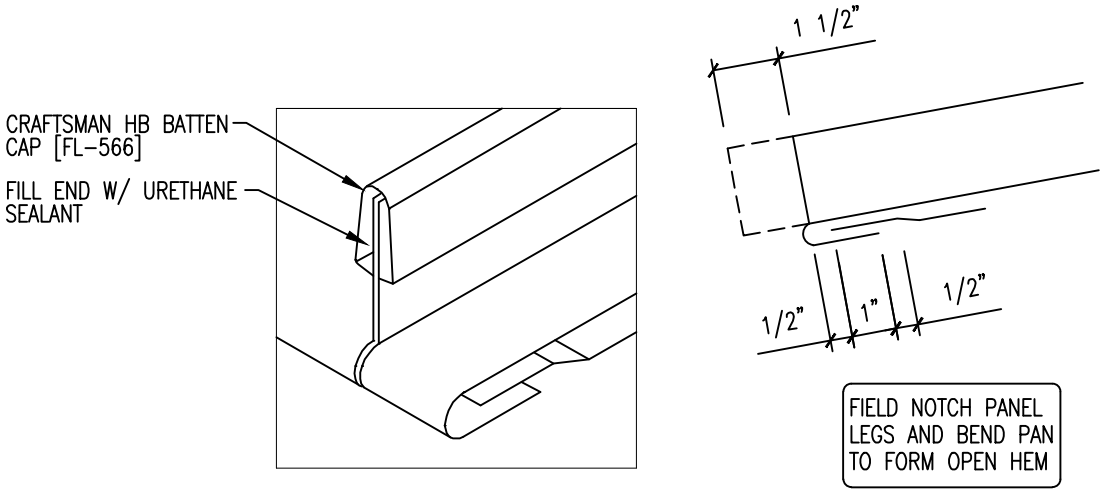
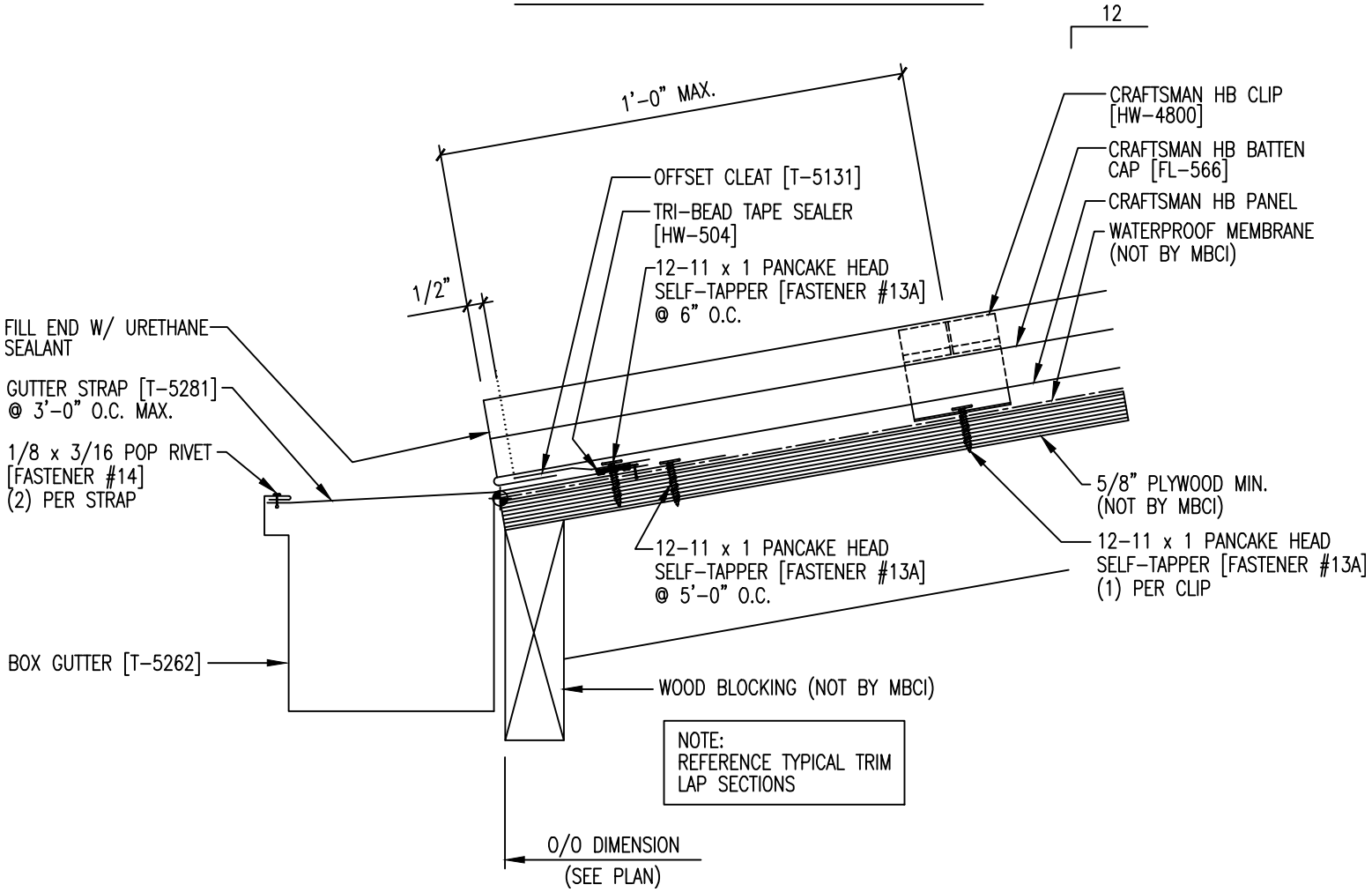
PANEL ENGAGEMENT DETAIL