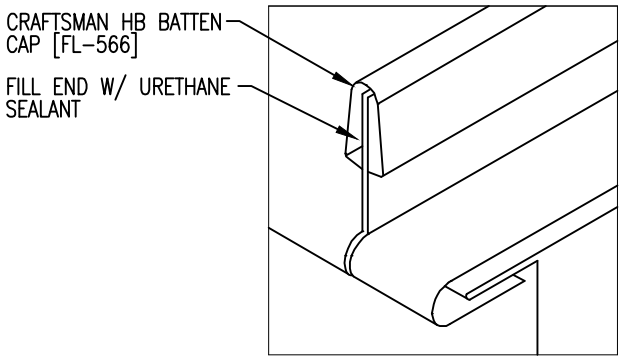

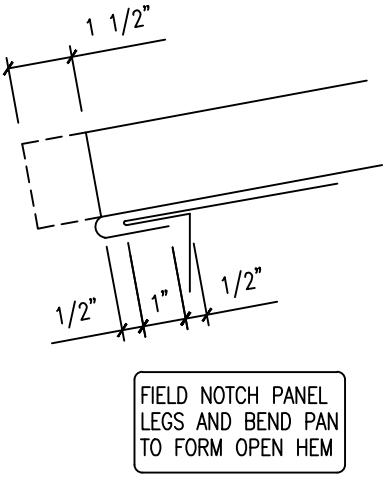
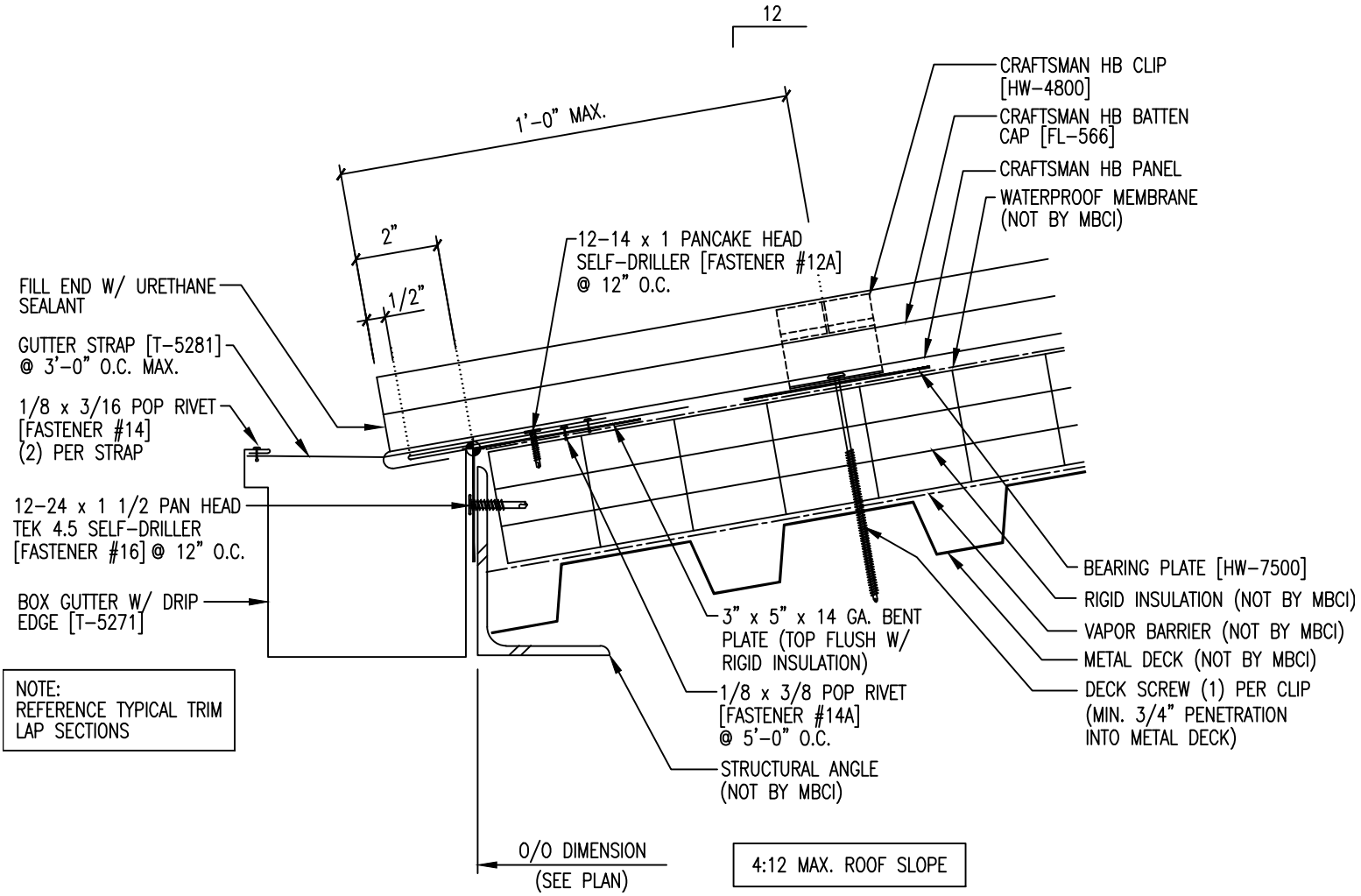
PANEL ENGAGEMENT DETAIL