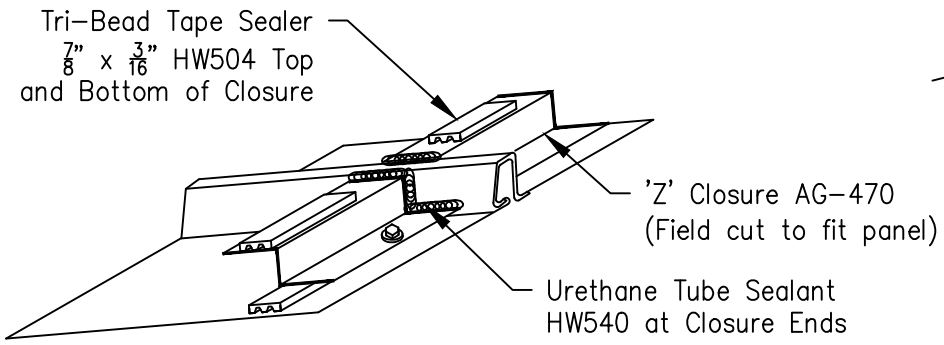

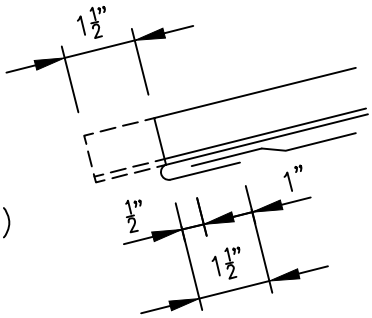
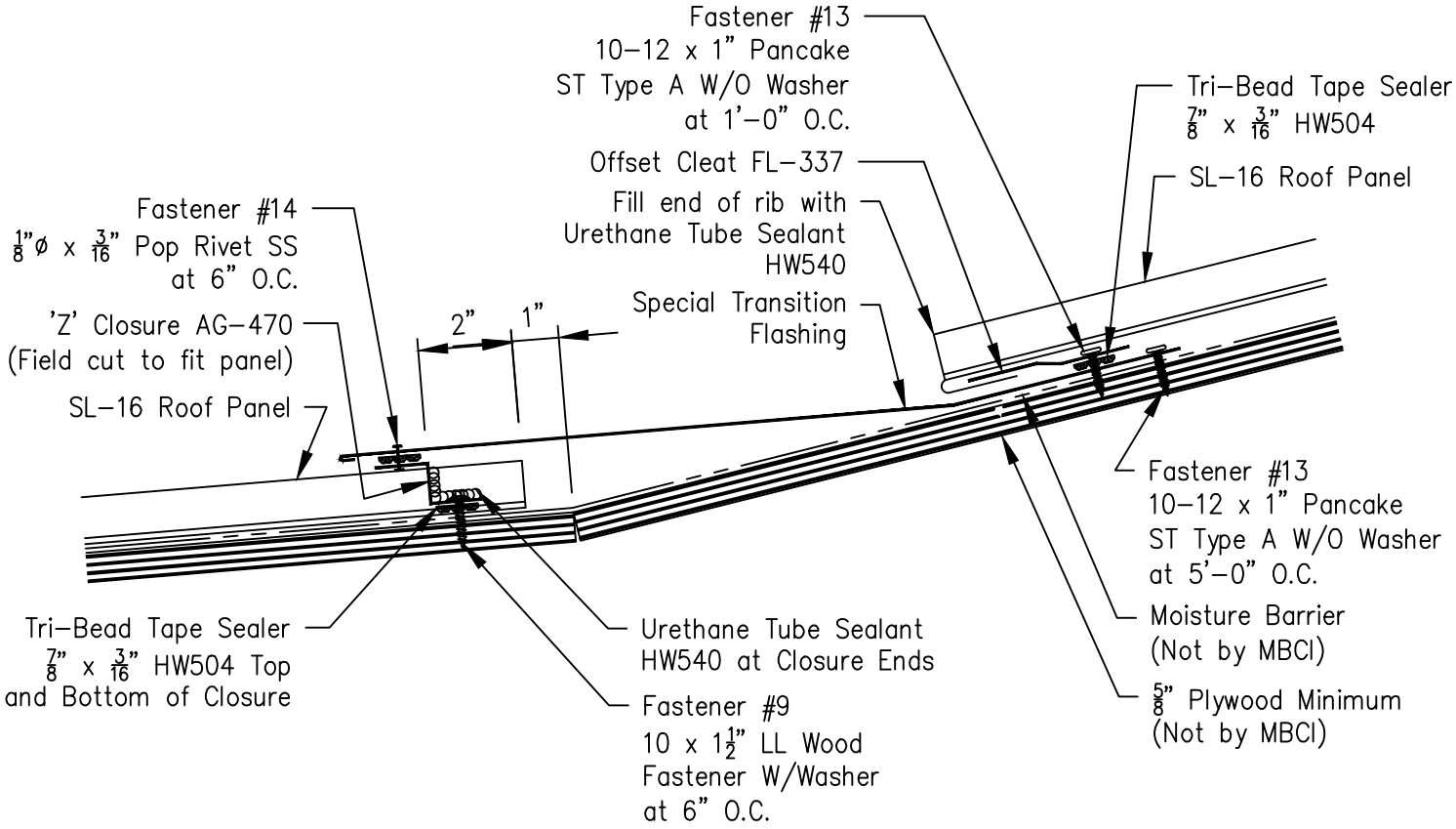
Field Notch Panel Legs
1 1/2" and Bend Pan
to Form Open Hem
Note: Panels With Minor
Ribs Cannot be Hemmed