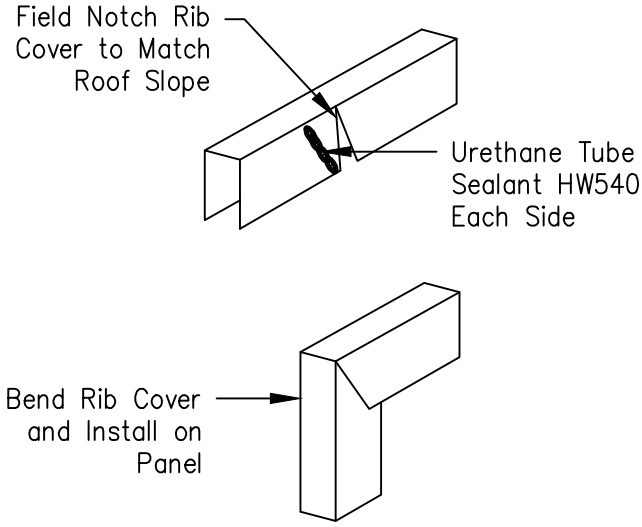
Field Notch Rib Cover to Match Roof Slope
Urethane Tube Sealant HW540 Each Side
Bend Rib Cover and Install on Panel

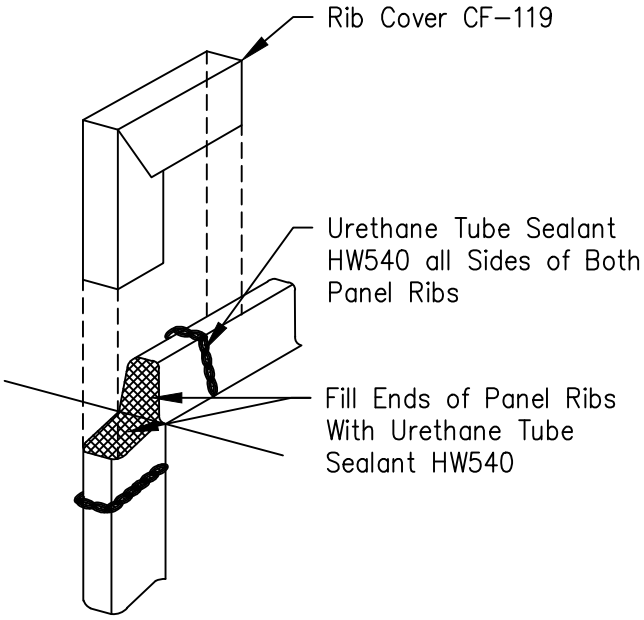
Rib Cover CF–119
Urethane Tube Sealant HW540 all Sides of Both Panel Ribs
Fill Ends of Panel Ribs With Urethane Tube Sealant HW540

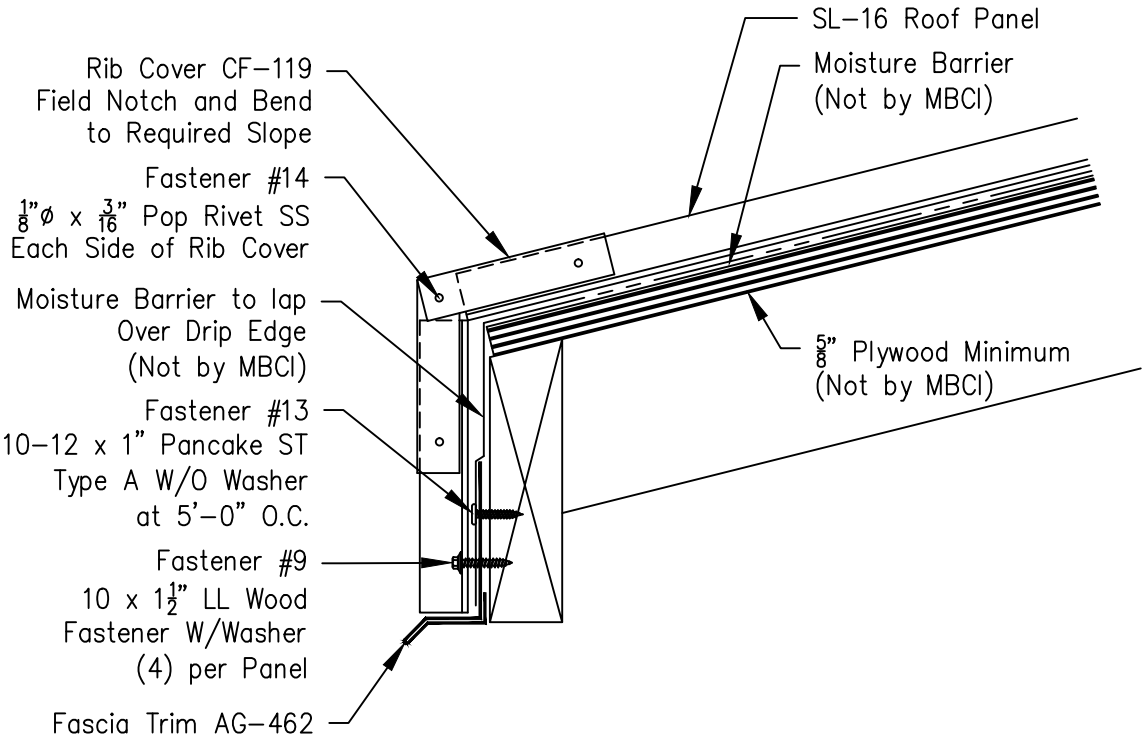
SL–16 Roof Panel
Moisture Barrier (Not by MBCI)
Rib Cover CF–119 Field Notch and Bend to Required Slope
Fastener #14 $\frac{1}{8}$"ø x $\frac{3}{16}$" Pop Rivet SS Each Side of Rib Cover
Moisture Barrier to lap Over Drip Edge (Not by MBCI)
$\frac{5}{8}$" Plywood Minimum (Not by MBCI)
Fastener #13 10–12 x 1" Pancake ST Type A W/O Washer at 5'–0" O.C.
Fastener #9 10 x $1\frac{1}{2}$" LL Wood Fastener W/Washer (4) per Panel
Fascia Trim AG–462