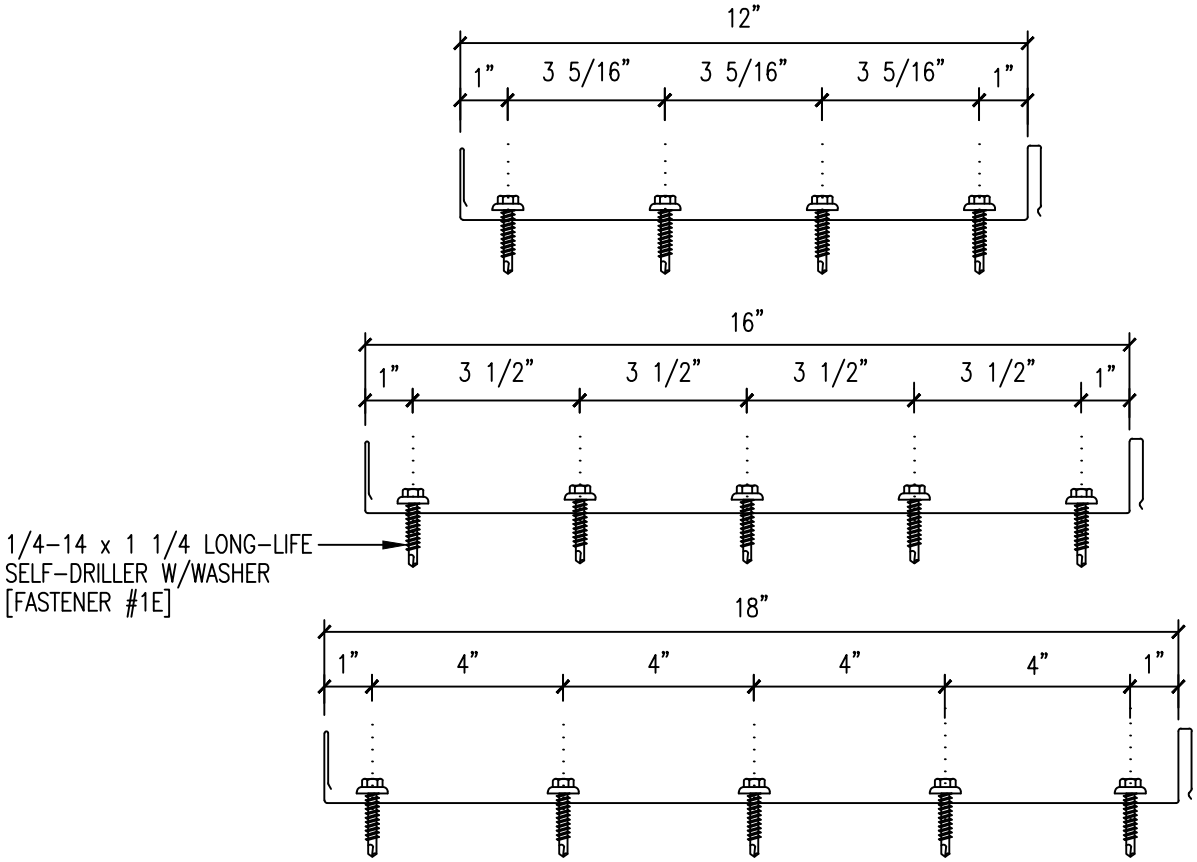
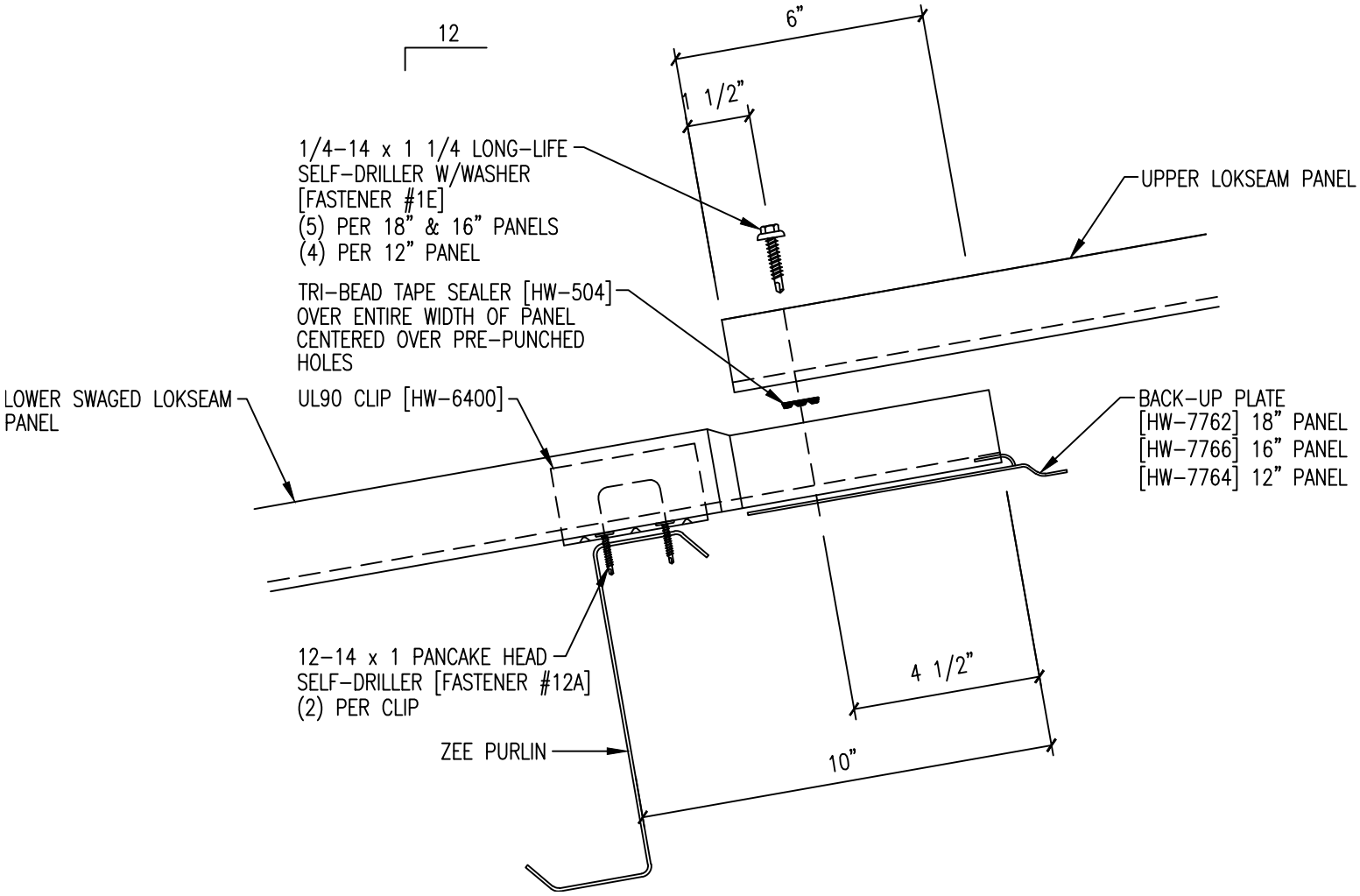
FASTENER SPACING