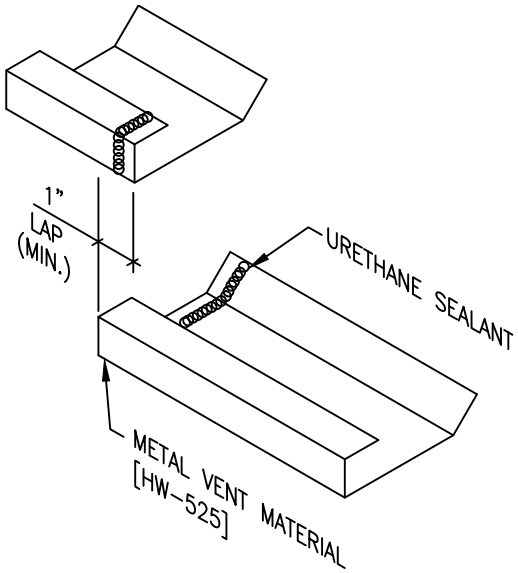
1"
LAP
(MIN.)
URETHANE SEALANT
METAL VENT MATERIAL
[HW-525]

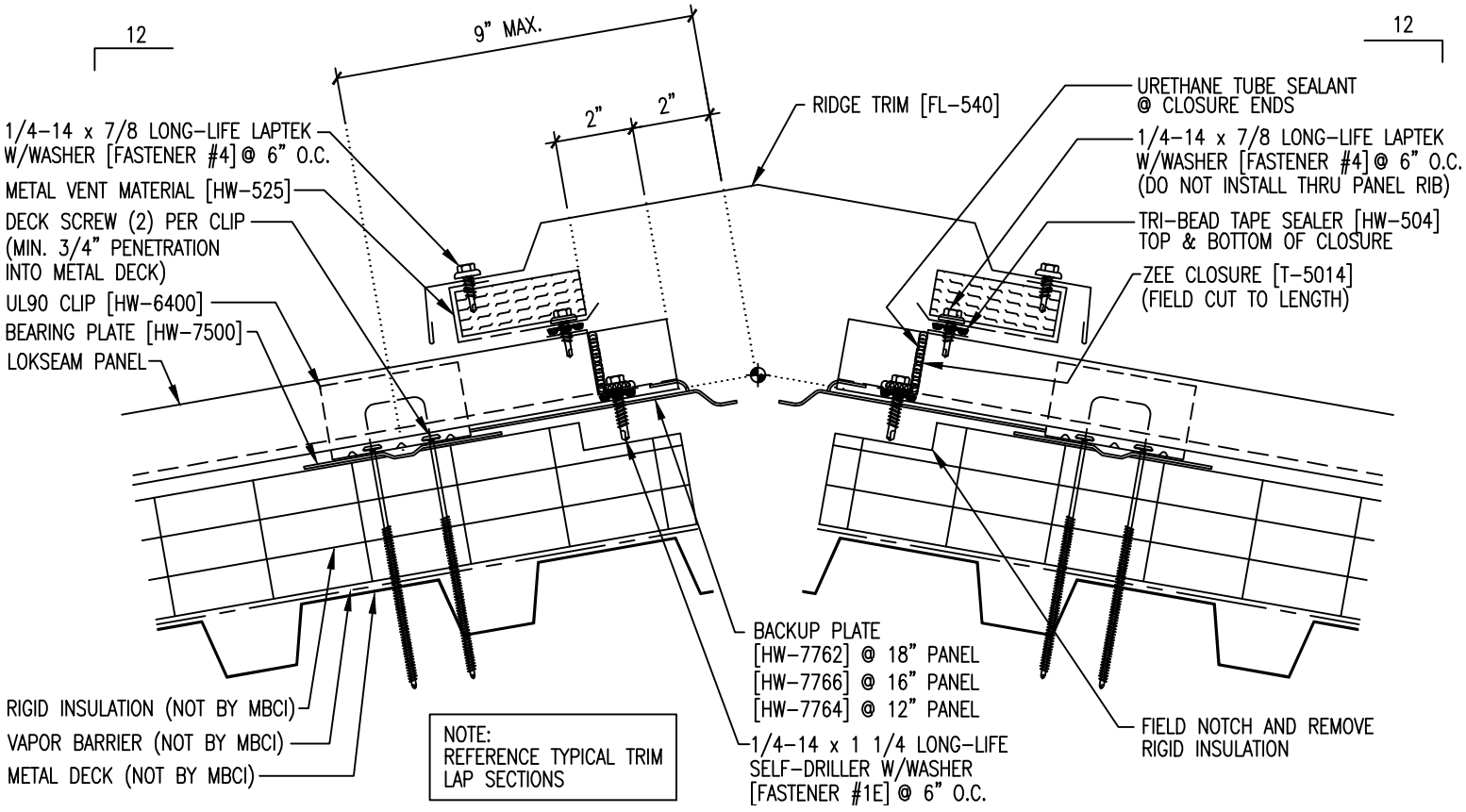
12
9" MAX.
12
2"
2"
RIDGE TRIM [FL-540]
1/4-14 x 7/8 LONG-LIFE LAPTEK
W/WASHER [FASTENER #4] @ 6" O.C.
METAL VENT MATERIAL [HW-525]
DECK SCREW (2) PER CLIP
(MIN. 3/4" PENETRATION
INTO METAL DECK)
UL90 CLIP [HW-6400]
BEARING PLATE [HW-7500]
LOKSEAM PANEL
URETHANE TUBE SEALANT
@ CLOSURE ENDS
1/4-14 x 7/8 LONG-LIFE LAPTEK
W/WASHER [FASTENER #4] @ 6" O.C.
(DO NOT INSTALL THRU PANEL RIB)
TRI-BEAD TAPE SEALER [HW-504]
TOP & BOTTOM OF CLOSURE
ZEE CLOSURE [T-5014]
(FIELD CUT TO LENGTH)
BACKUP PLATE
[HW-7762] @ 18" PANEL
[HW-7766] @ 16" PANEL
[HW-7764] @ 12" PANEL
RIGID INSULATION (NOT BY MBCI)
VAPOR BARRIER (NOT BY MBCI)
METAL DECK (NOT BY MBCI)
NOTE:
REFERENCE TYPICAL TRIM
LAP SECTIONS
1/4-14 x 1 1/4 LONG-LIFE
SELF-DRILLER W/WASHER
[FASTENER #1E] @ 6" O.C.
FIELD NOTCH AND REMOVE
RIGID INSULATION