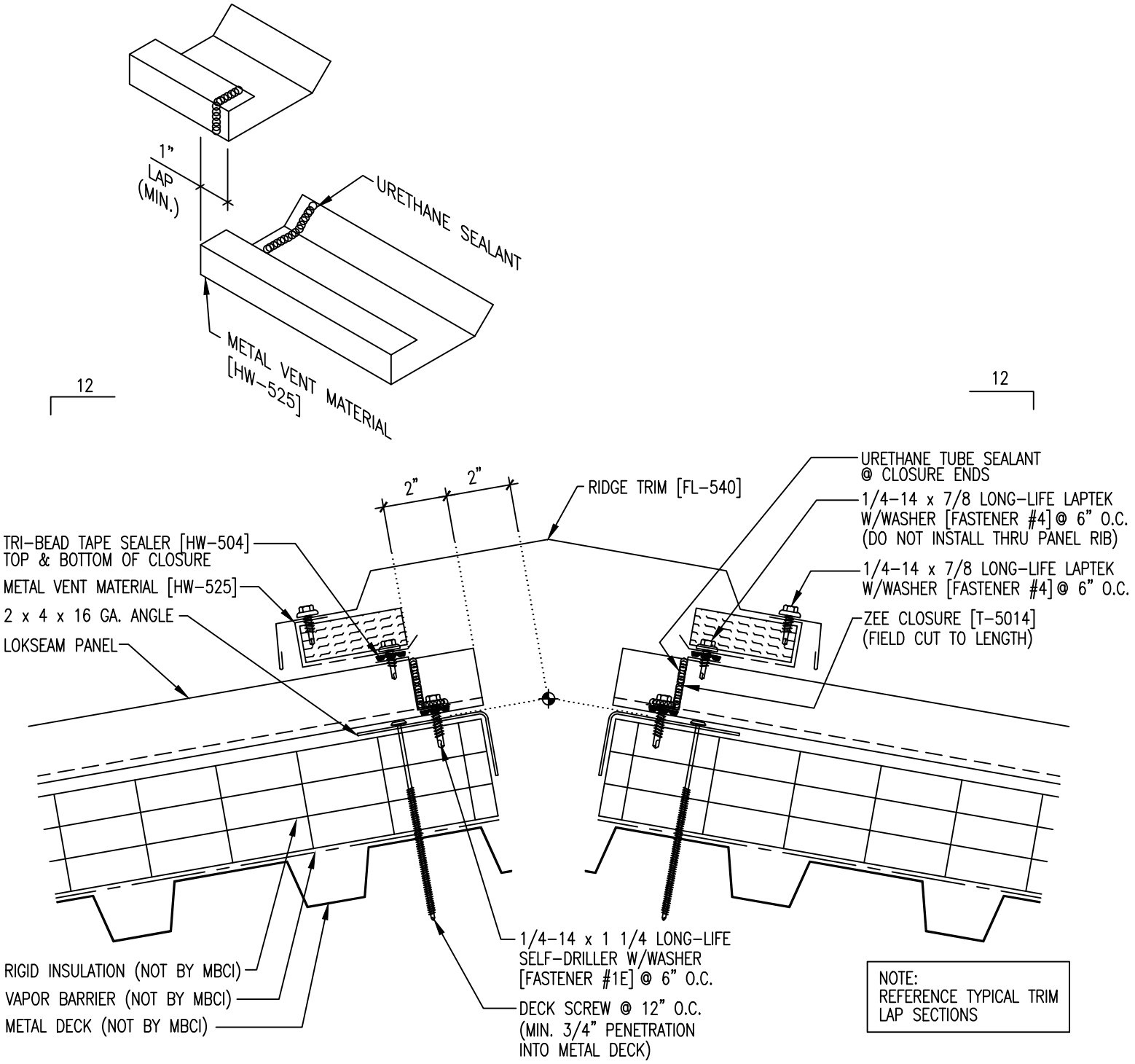
1"
LAP
(MIN.)
URETHANE SEALANT
METAL VENT MATERIAL
[HW-525]
12
12
2"
2"
RIDGE TRIM [FL-540]
URETHANE TUBE SEALANT
@ CLOSURE ENDS
1/4-14 x 7/8 LONG-LIFE LAPTEK
W/WASHER [FASTENER #4] @ 6" O.C.
(DO NOT INSTALL THRU PANEL RIB)
1/4-14 x 7/8 LONG-LIFE LAPTEK
W/WASHER [FASTENER #4] @ 6" O.C.
ZEE CLOSURE [T-5014]
(FIELD CUT TO LENGTH)
TRI-BEAD TAPE SEALER [HW-504]
TOP & BOTTOM OF CLOSURE
METAL VENT MATERIAL [HW-525]
2 x 4 x 16 GA. ANGLE
LOKSEAM PANEL
RIGID INSULATION (NOT BY MBCI)
VAPOR BARRIER (NOT BY MBCI)
METAL DECK (NOT BY MBCI)
1/4-14 x 1 1/4 LONG-LIFE
SELF-DRILLER W/WASHER
[FASTENER #1E] @ 6" O.C.
DECK SCREW @ 12" O.C.
(MIN. 3/4" PENETRATION
INTO METAL DECK)
NOTE:
REFERENCE TYPICAL TRIM
LAP SECTIONS