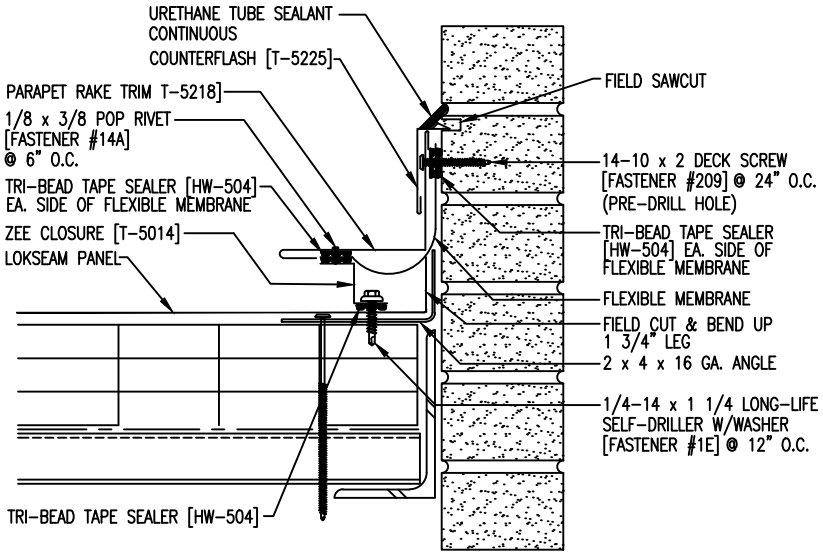
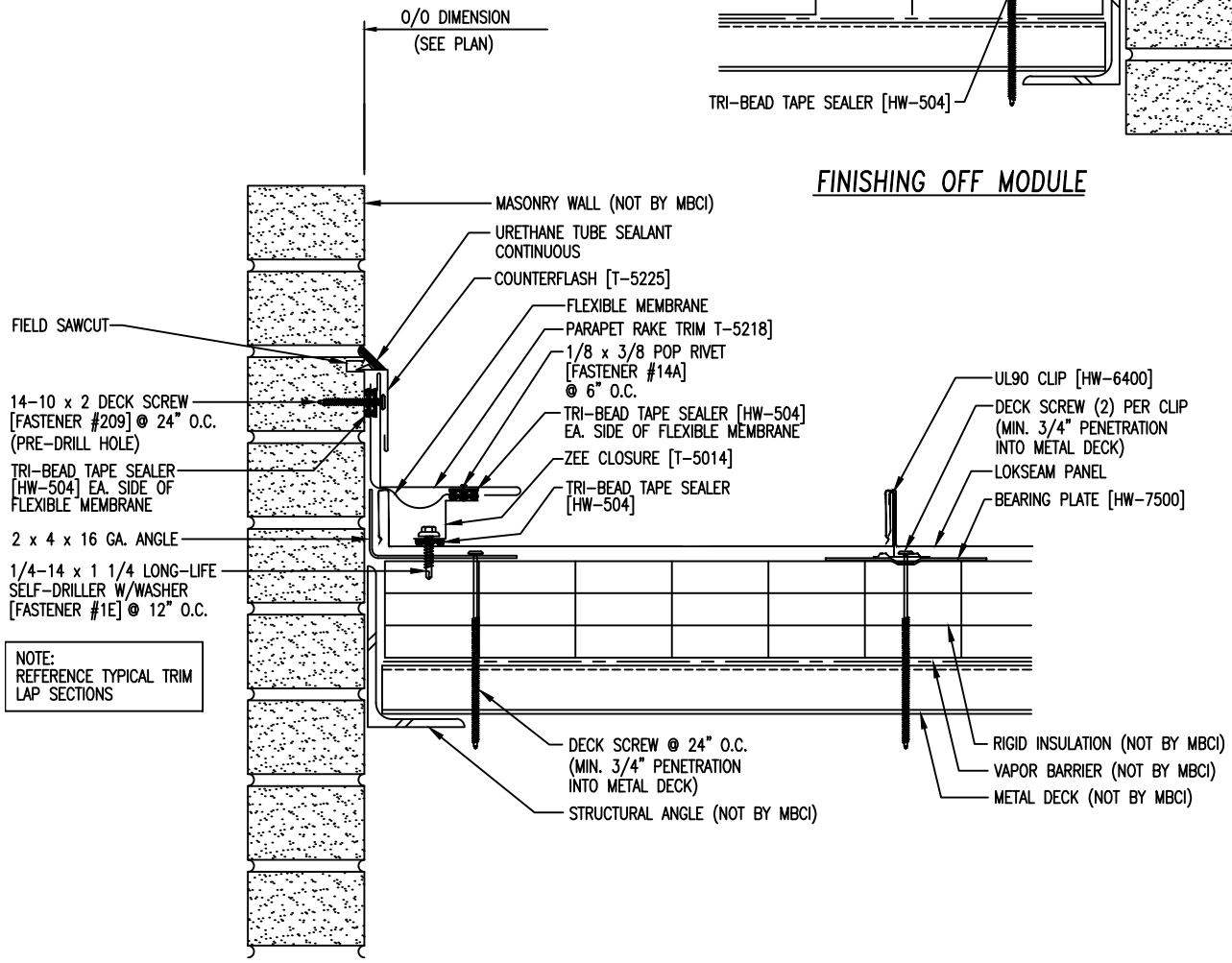
FINISHING OFF MODULE