FW-120 Wall Panel
Optional Sill With Soffit
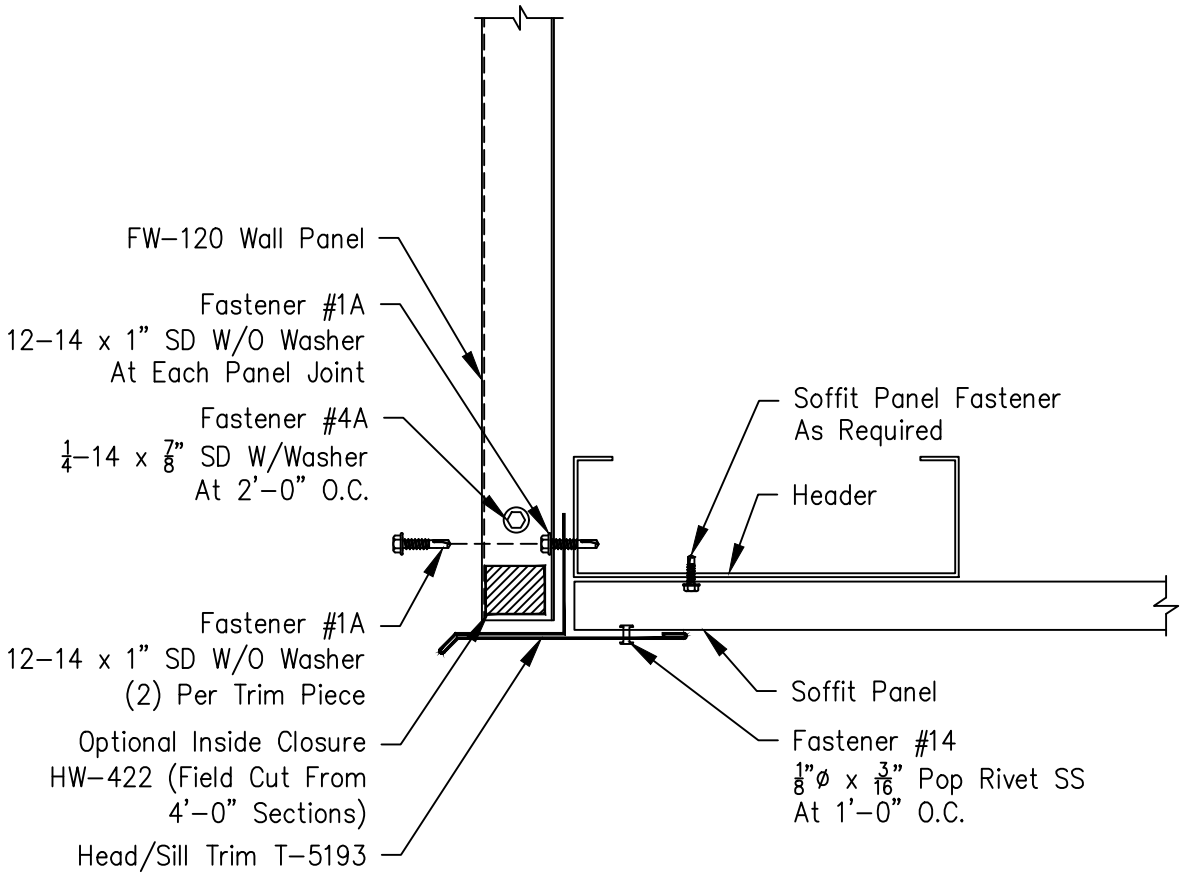
Page	
FW-G-SILL-01	
Date	Rev
Apr '18	01