FW-120 Wall Panel
Framed Opening Head
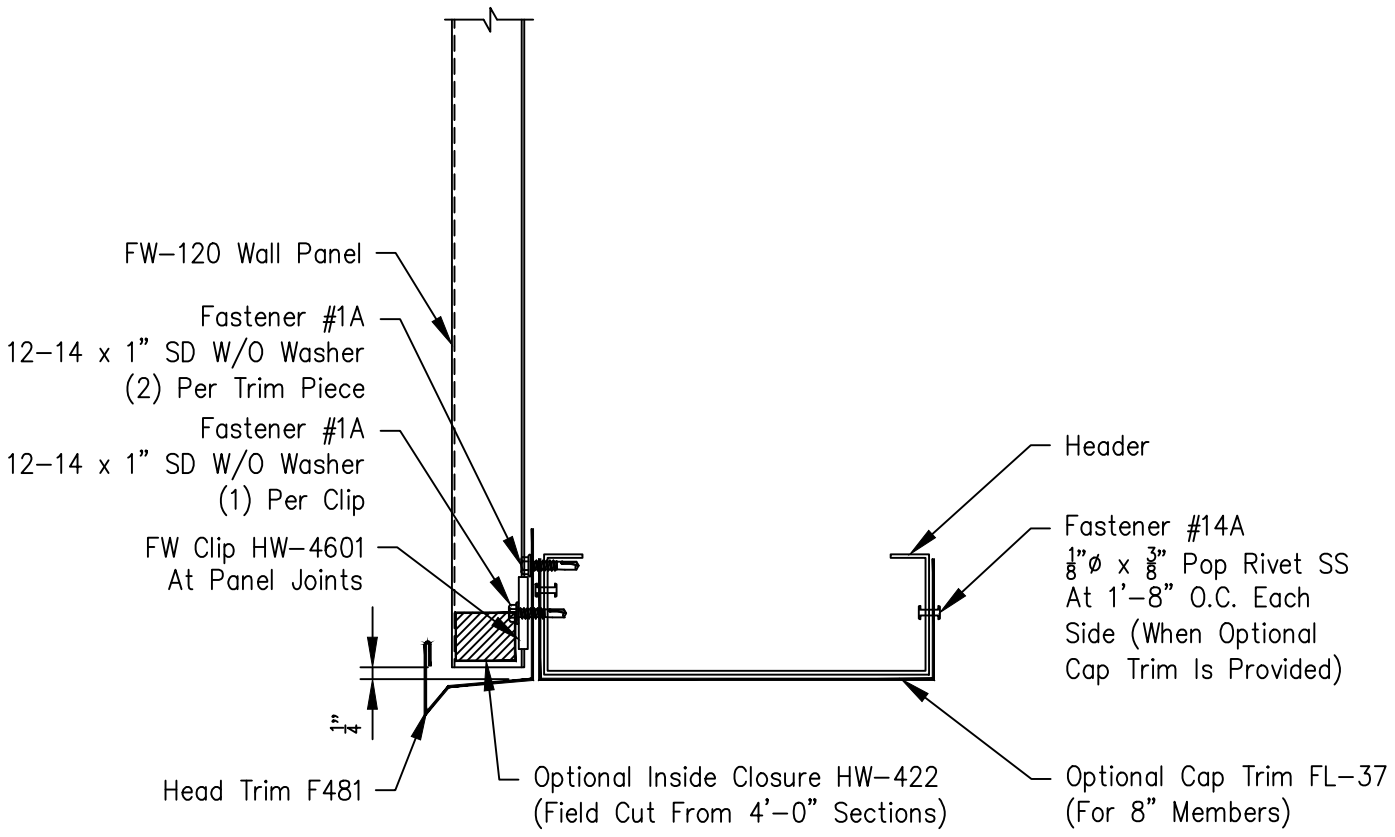
Page	
FW-G-HD-11	
Date	Rev
Apr '18	00