WALL GIRT

1/8 x 3/8 POP RIVET
[FASTENER #14A]
@ EACH WALL MEMBER

1/8 x 3/16 POP RIVET
[FASTENER #14]
@ 8" O.C. BETWEEN
WALL MEMBERS

OUTSIDE CORNER TRIM

FIELD INSTALLED FOAM OR
BLANKET INSULATION
(NOT BY MBCI)

PANEL THICKNESS

1/8 x 3/8 POP RIVET
[FASTENER #14A]
@ EACH WALL MEMBER

1/8 x 3/16 POP RIVET
[FASTENER #14]
@ 8" O.C.

NON-SKINNING BUTYL
SEALANT [7100]
(CONTINUOUS EACH LEG)

OFFSET INSIDE CORNER TRIM
[F3215]

THROUGH PANEL FASTENER
@ EACH WALL MEMBER

1" x 1/8" TAPE SEALER
[7300] CONTINUOUS
@ EACH LEG

WALL PANEL CLIP [4633]
@ PANEL SIDE JOINT

CLIP FASTENER
MIN. (2) REQ'D.

INSULATED CF METAL WALL
PANEL

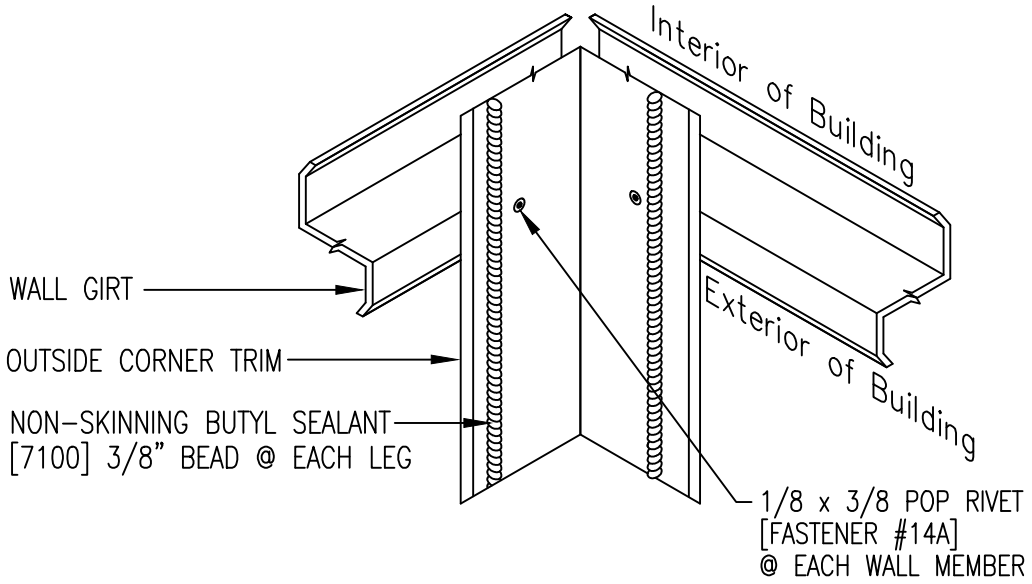

CORNER FRAMING & SEALANT AT INSIDE CORNER TRIM