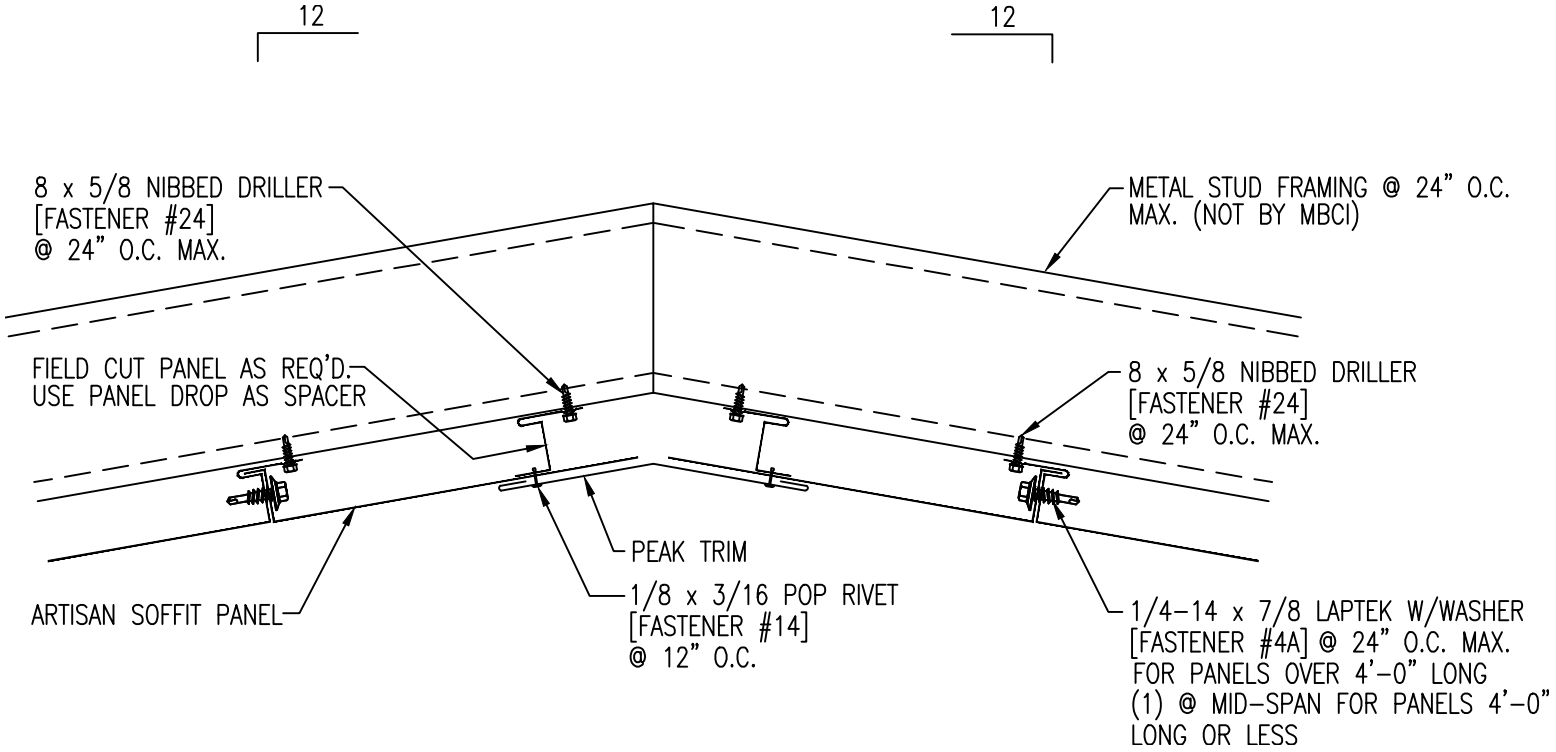
12
12
8 x 5/8 NIBBED DRILLER
[FASTENER #24]
@ 24" O.C. MAX.
METAL STUD FRAMING @ 24" O.C.
MAX. (NOT BY MBCI)
FIELD CUT PANEL AS REQ'D.
USE PANEL DROP AS SPACER
8 x 5/8 NIBBED DRILLER
[FASTENER #24]
@ 24" O.C. MAX.
PEAK TRIM
ARTISAN SOFFIT PANEL
1/8 x 3/16 POP RIVET
[FASTENER #14]
@ 12" O.C.
1/4-14 x 7/8 LAPTEK W/WASHER
[FASTENER #4A] @ 24" O.C. MAX.
FOR PANELS OVER 4'-0" LONG
(1) @ MID-SPAN FOR PANELS 4'-0"
LONG OR LESS