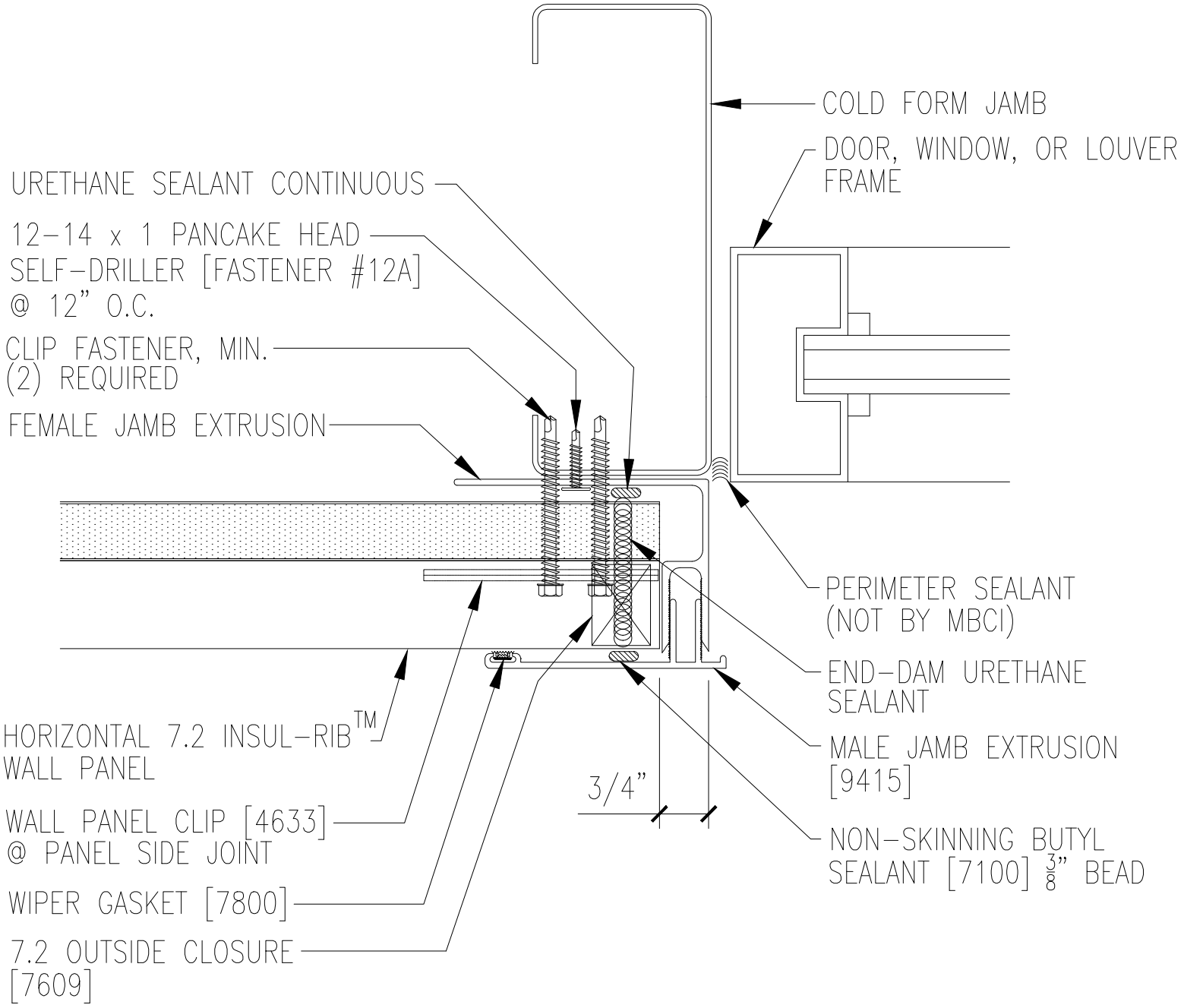


NOTE:
THIS DETAIL CAN ONLY BE USED WITH 3" & 4" THICK PANELS