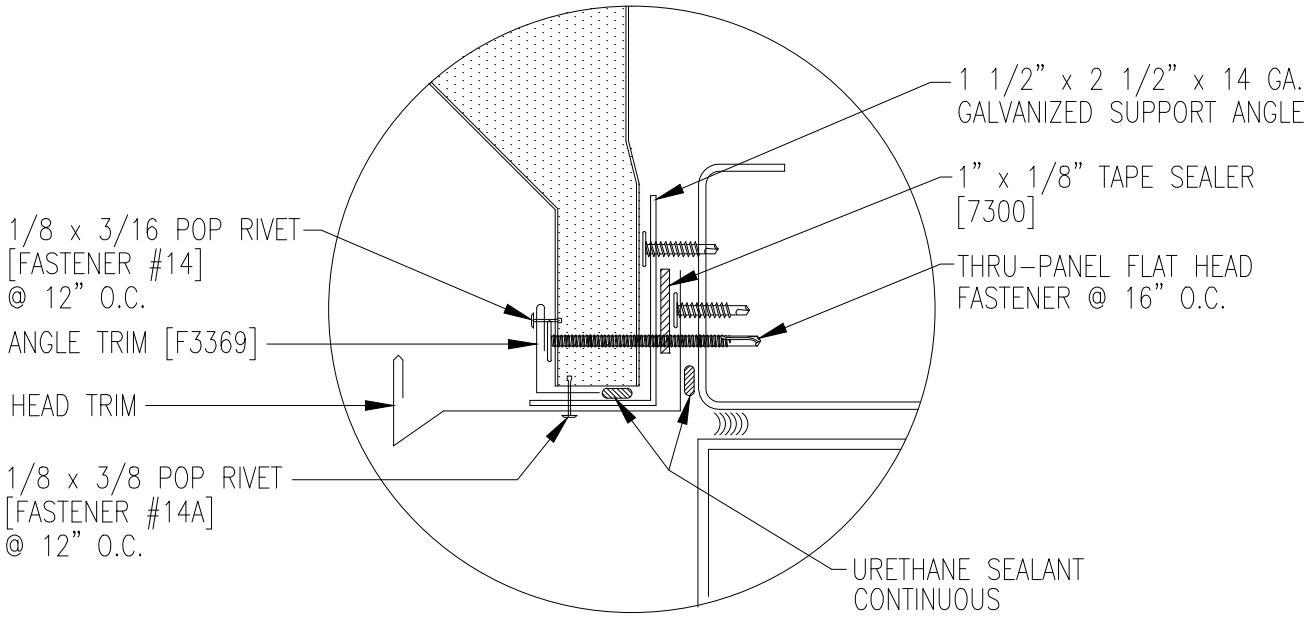
1 1/2" x 2 1/2" x 14 GA.
GALVANIZED SUPPORT ANGLE
1" x 1/8" TAPE SEALER
[7300]
THRU-PANEL FLAT HEAD
FASTENER @ 16" O.C.
1/8 x 3/16 POP RIVET
[FASTENER #14]
@ 12" O.C.
ANGLE TRIM [F3369]
HEAD TRIM
1/8 x 3/8 POP RIVET
[FASTENER #14A]
@ 12" O.C.
URETHANE SEALANT
CONTINUOUS

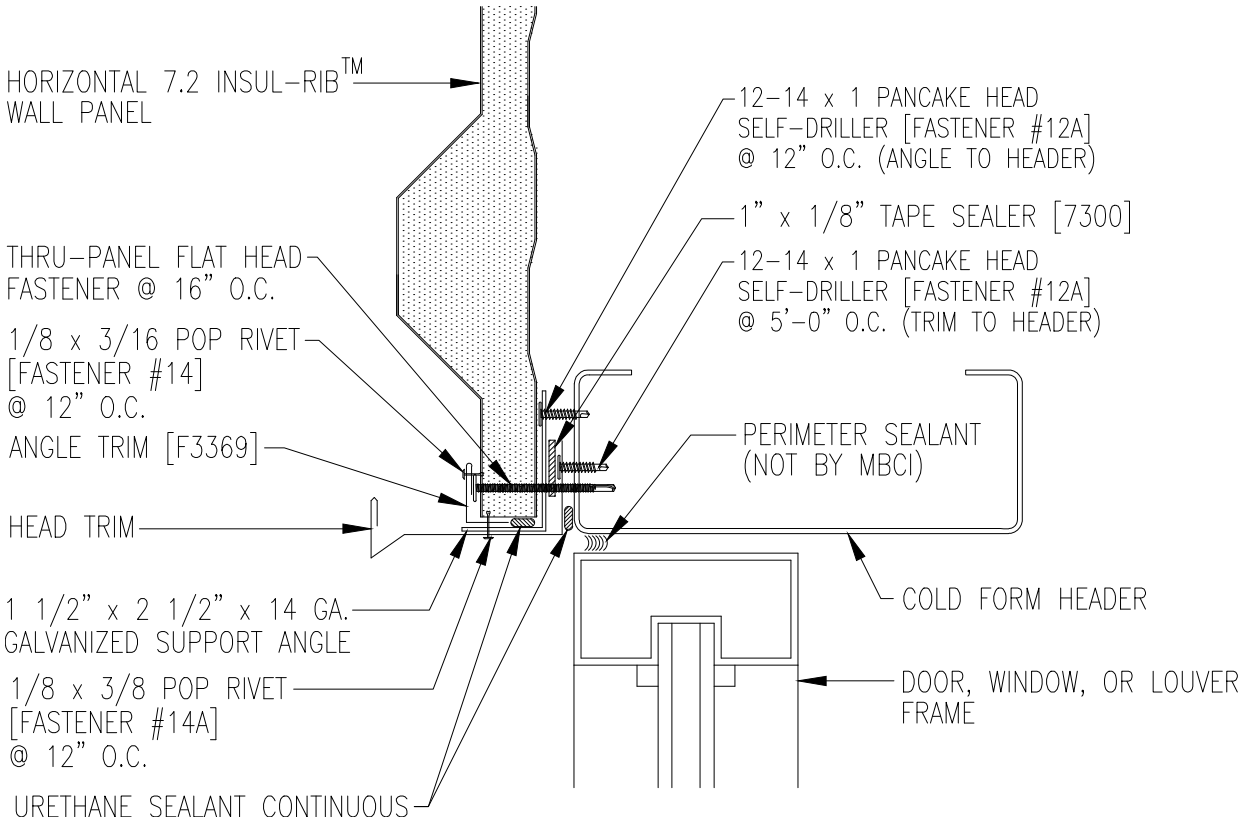
HORIZONTAL 7.2 INSUL-RIB™
WALL PANEL
12-14 x 1 PANCAKE HEAD
SELF-DRILLER [FASTENER #12A]
@ 12" O.C. (ANGLE TO HEADER)
1" x 1/8" TAPE SEALER [7300]
THRU-PANEL FLAT HEAD
FASTENER @ 16" O.C.
12-14 x 1 PANCAKE HEAD
SELF-DRILLER [FASTENER #12A]
@ 5'-0" O.C. (TRIM TO HEADER)
1/8 x 3/16 POP RIVET
[FASTENER #14]
@ 12" O.C.
ANGLE TRIM [F3369]
PERIMETER SEALANT
(NOT BY MBCI)
HEAD TRIM
COLD FORM HEADER
1 1/2" x 2 1/2" x 14 GA.
GALVANIZED SUPPORT ANGLE
1/8 x 3/8 POP RIVET
[FASTENER #14A]
@ 12" O.C.
DOOR, WINDOW, OR LOUVER
FRAME
URETHANE SEALANT CONTINUOUS