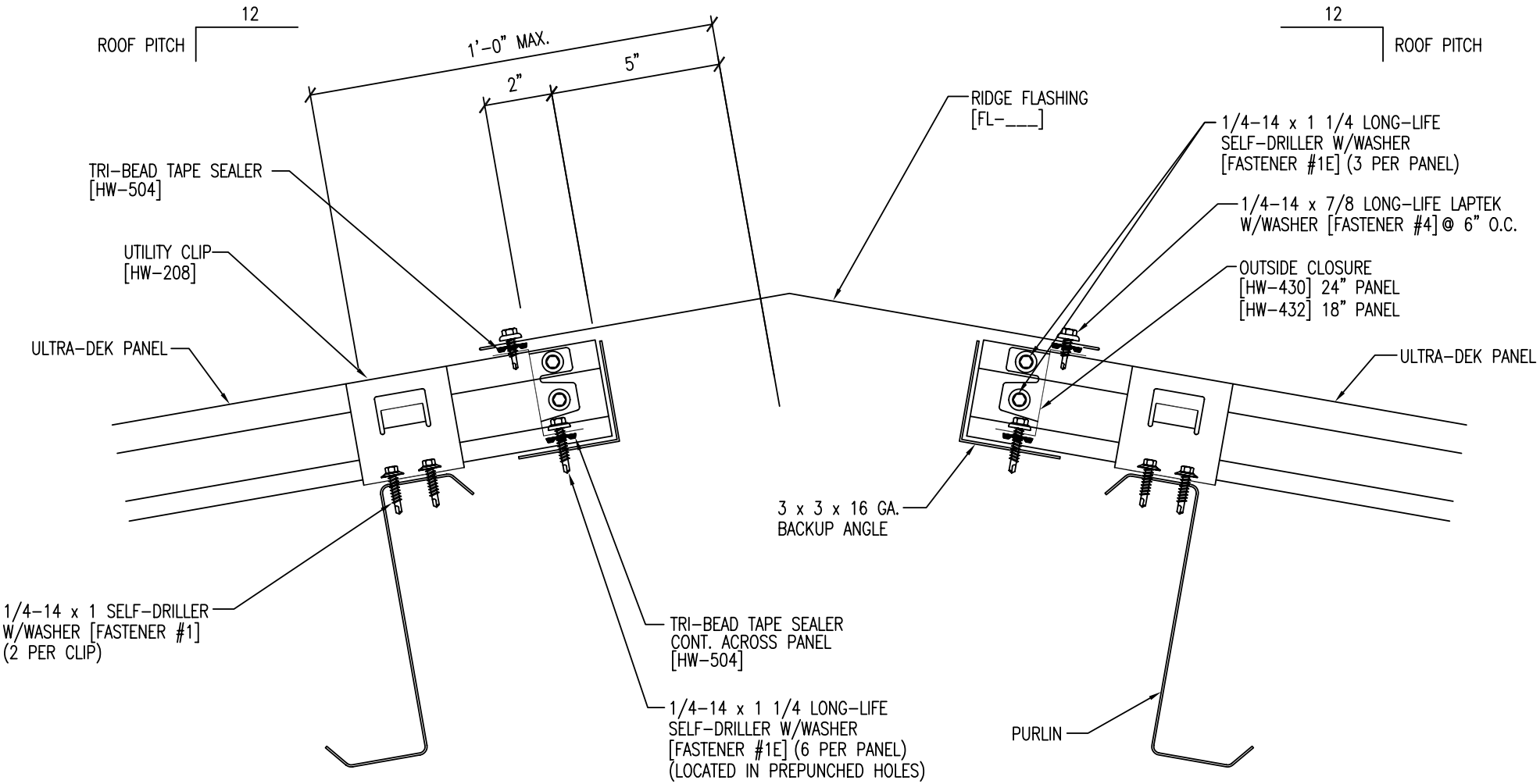
12
ROOF PITCH
1'-0" MAX.
2"
5"
12
ROOF PITCH
RIDGE FLASHING
[FL-___]
1/4-14 x 1 1/4 LONG-LIFE
SELF-DRILLER W/WASHER
[FASTENER #1E] (3 PER PANEL)
TRI-BEAD TAPE SEALER
[HW-504]
1/4-14 x 7/8 LONG-LIFE LAPTEK
W/WASHER [FASTENER #4] @ 6" O.C.
UTILITY CLIP
[HW-208]
OUTSIDE CLOSURE
[HW-430] 24" PANEL
[HW-432] 18" PANEL
ULTRA-DEK PANEL
ULTRA-DEK PANEL
3 x 3 x 16 GA.
BACKUP ANGLE
1/4-14 x 1 SELF-DRILLER
W/WASHER [FASTENER #1]
(2 PER CLIP)
TRI-BEAD TAPE SEALER
CONT. ACROSS PANEL
[HW-504]
1/4-14 x 1 1/4 LONG-LIFE
SELF-DRILLER W/WASHER
[FASTENER #1E] (6 PER PANEL)
(LOCATED IN PREPUNCHED HOLES)
PURLIN