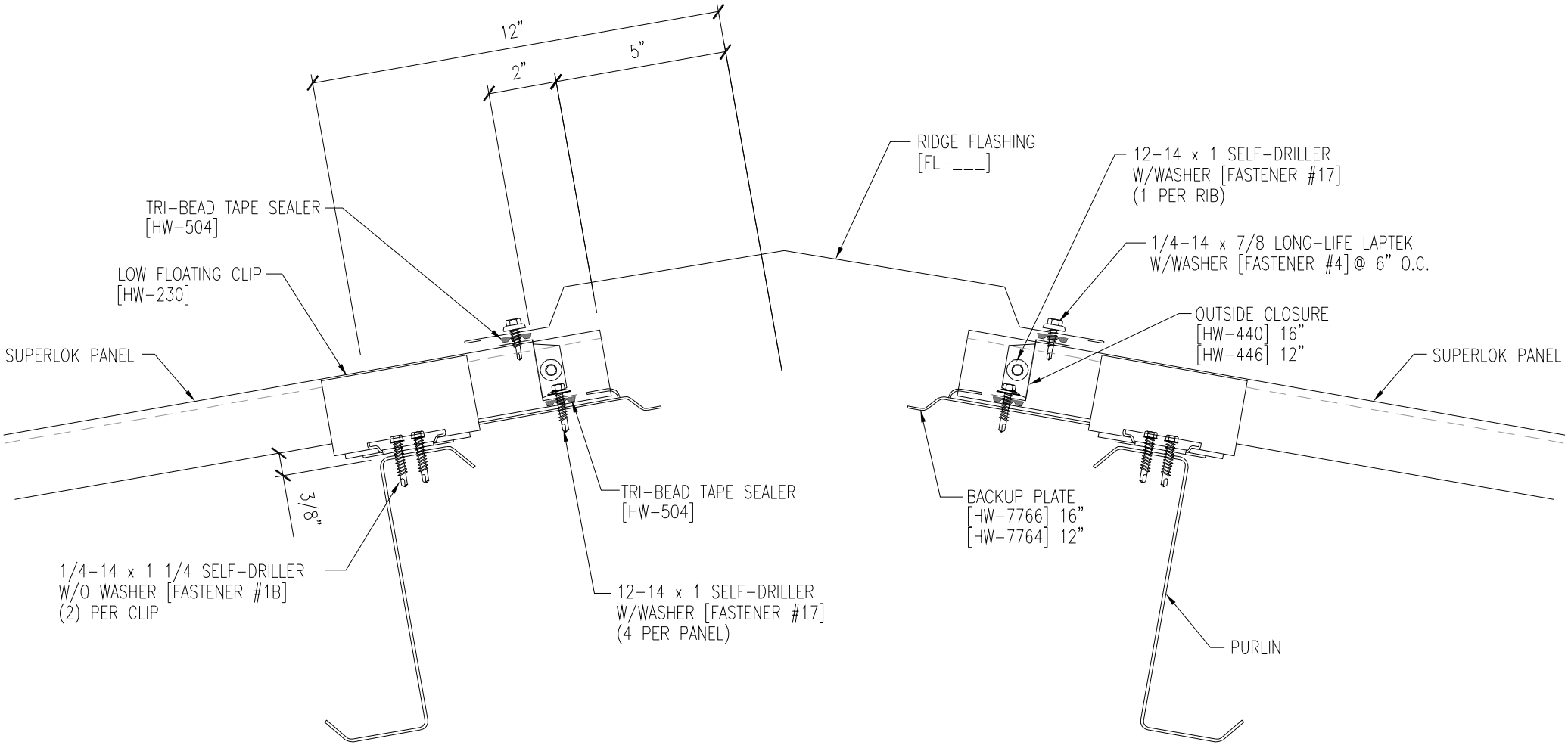
12"
5"
2"
RIDGE FLASHING
[FL-___]
12-14 x 1 SELF-DRILLER
W/WASHER [FASTENER #17]
(1 PER RIB)
TRI-BEAD TAPE SEALER
[HW-504]
1/4-14 x 7/8 LONG-LIFE LAPTEK
W/WASHER [FASTENER #4] @ 6" O.C.
LOW FLOATING CLIP
[HW-230]
OUTSIDE CLOSURE
[HW-440] 16"
[HW-446] 12"
SUPERLOK PANEL
SUPERLOK PANEL
3/8"
TRI-BEAD TAPE SEALER
[HW-504]
BACKUP PLATE
[HW-7766] 16"
[HW-7764] 12"
1/4-14 x 1 1/4 SELF-DRILLER
W/O WASHER [FASTENER #1B]
(2) PER CLIP
12-14 x 1 SELF-DRILLER
W/WASHER [FASTENER #17]
(4 PER PANEL)
PURLIN