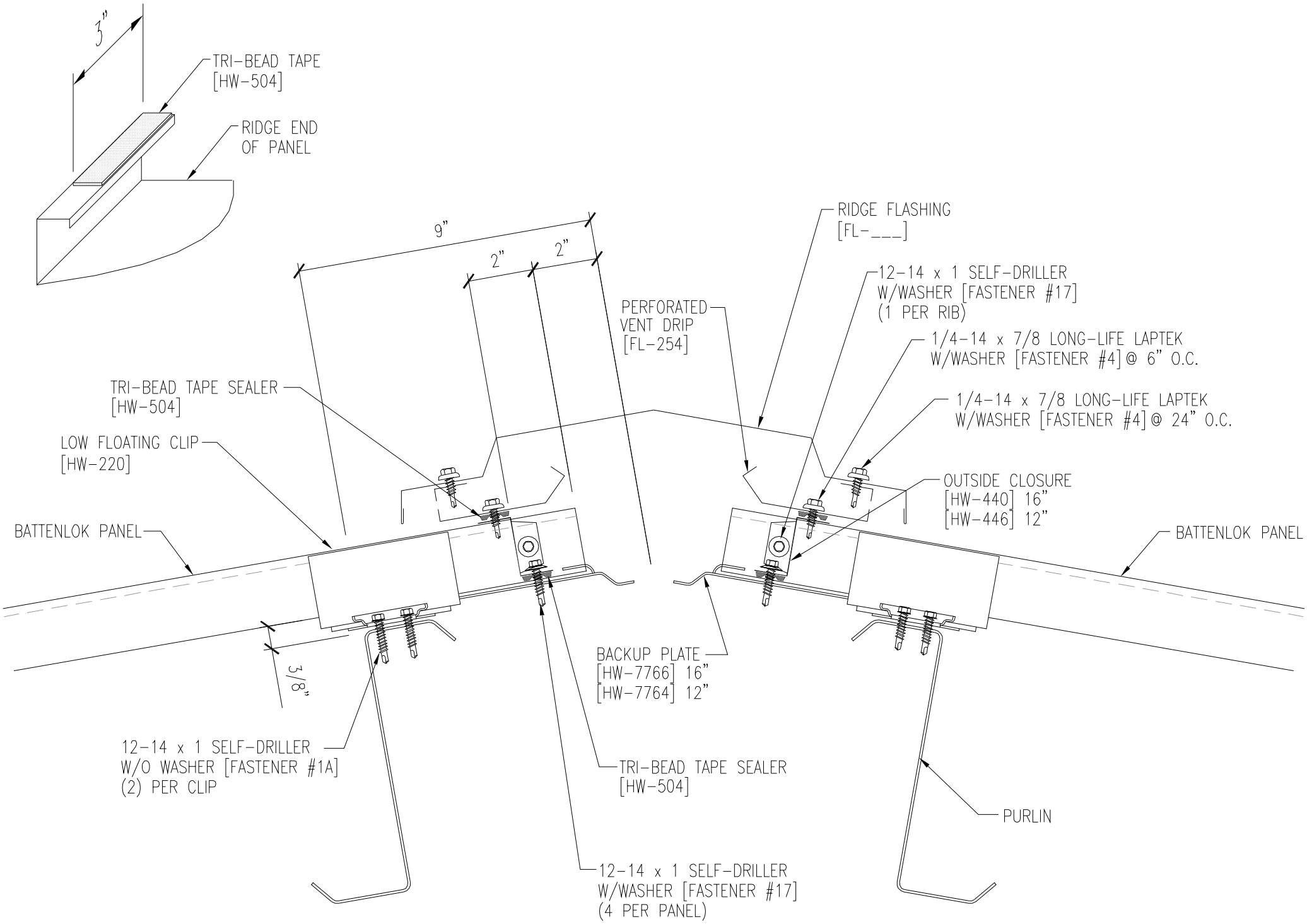
3"
TRI-BEAD TAPE
[HW-504]
RIDGE END
OF PANEL
9"
2"
2"
RIDGE FLASHING
[FL-___]
12-14 x 1 SELF-DRILLER
W/WASHER [FASTENER #17]
(1 PER RIB)
PERFORATED
VENT DRIP
[FL-254]
1/4-14 x 7/8 LONG-LIFE LAPTEK
W/WASHER [FASTENER #4] @ 6" O.C.
TRI-BEAD TAPE SEALER
[HW-504]
1/4-14 x 7/8 LONG-LIFE LAPTEK
W/WASHER [FASTENER #4] @ 24" O.C.
LOW FLOATING CLIP
[HW-220]
OUTSIDE CLOSURE
[HW-440] 16"
[HW-446] 12"
BATTENLOK PANEL
BATTENLOK PANEL
3/8"
BACKUP PLATE
[HW-7766] 16"
[HW-7764] 12"
12-14 x 1 SELF-DRILLER
W/O WASHER [FASTENER #1A]
(2) PER CLIP
TRI-BEAD TAPE SEALER
[HW-504]
PURLIN
12-14 x 1 SELF-DRILLER
W/WASHER [FASTENER #17]
(4 PER PANEL)