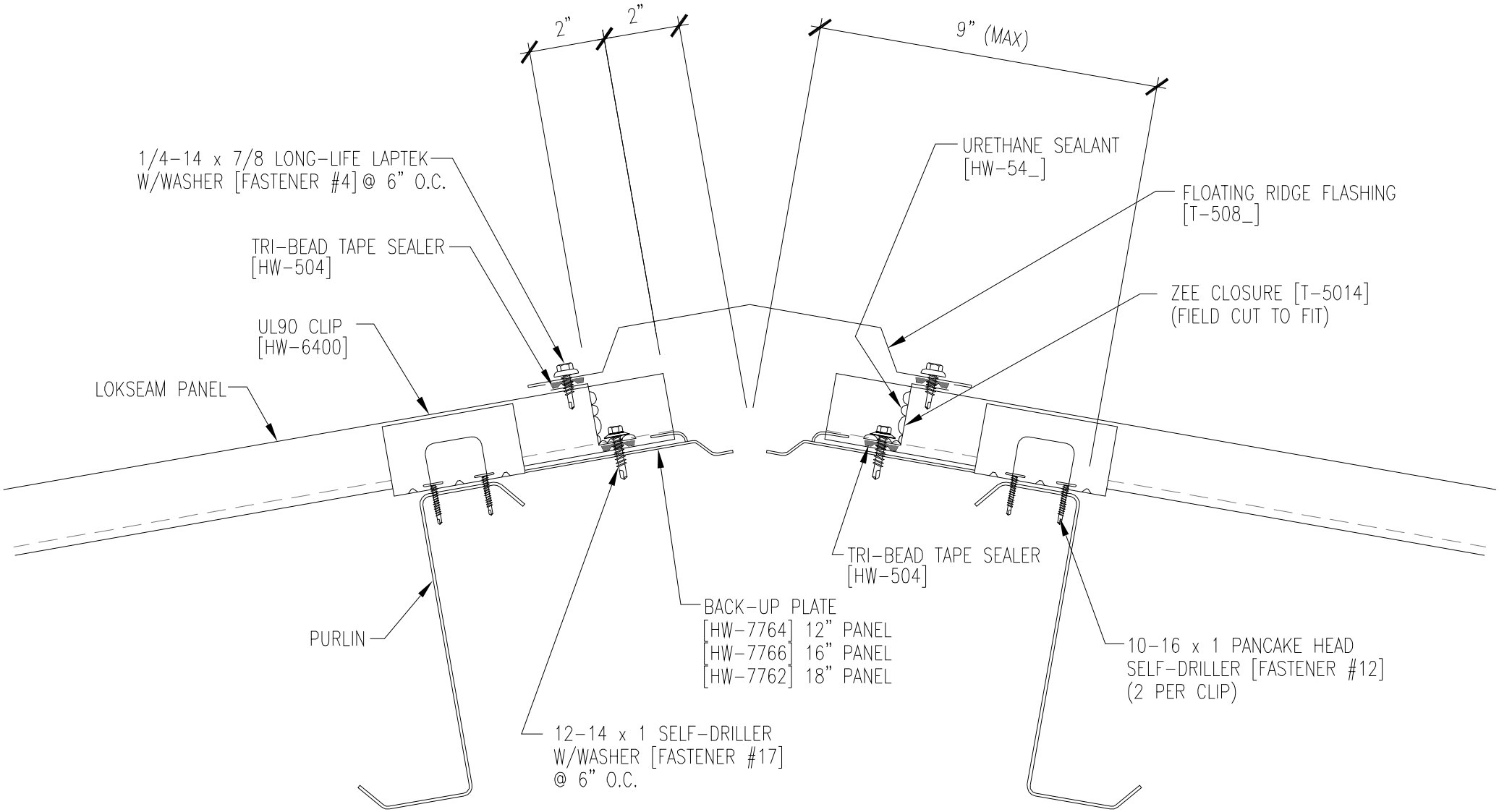
2"
2"
9" (MAX)
1/4-14 x 7/8 LONG-LIFE LAPTEK
W/WASHER [FASTENER #4] @ 6" O.C.
TRI-BEAD TAPE SEALER
[HW-504]
UL90 CLIP
[HW-6400]
LOKSEAM PANEL
URETHANE SEALANT
[HW-54_]
FLOATING RIDGE FLASHING
[T-508_]
ZEE CLOSURE [T-5014]
(FIELD CUT TO FIT)
TRI-BEAD TAPE SEALER
[HW-504]
BACK-UP PLATE
[HW-7764] 12" PANEL
[HW-7766] 16" PANEL
[HW-7762] 18" PANEL
PURLIN
10-16 x 1 PANCAKE HEAD
SELF-DRILLER [FASTENER #12]
(2 PER CLIP)
12-14 x 1 SELF-DRILLER
W/WASHER [FASTENER #17]
@ 6" O.C.