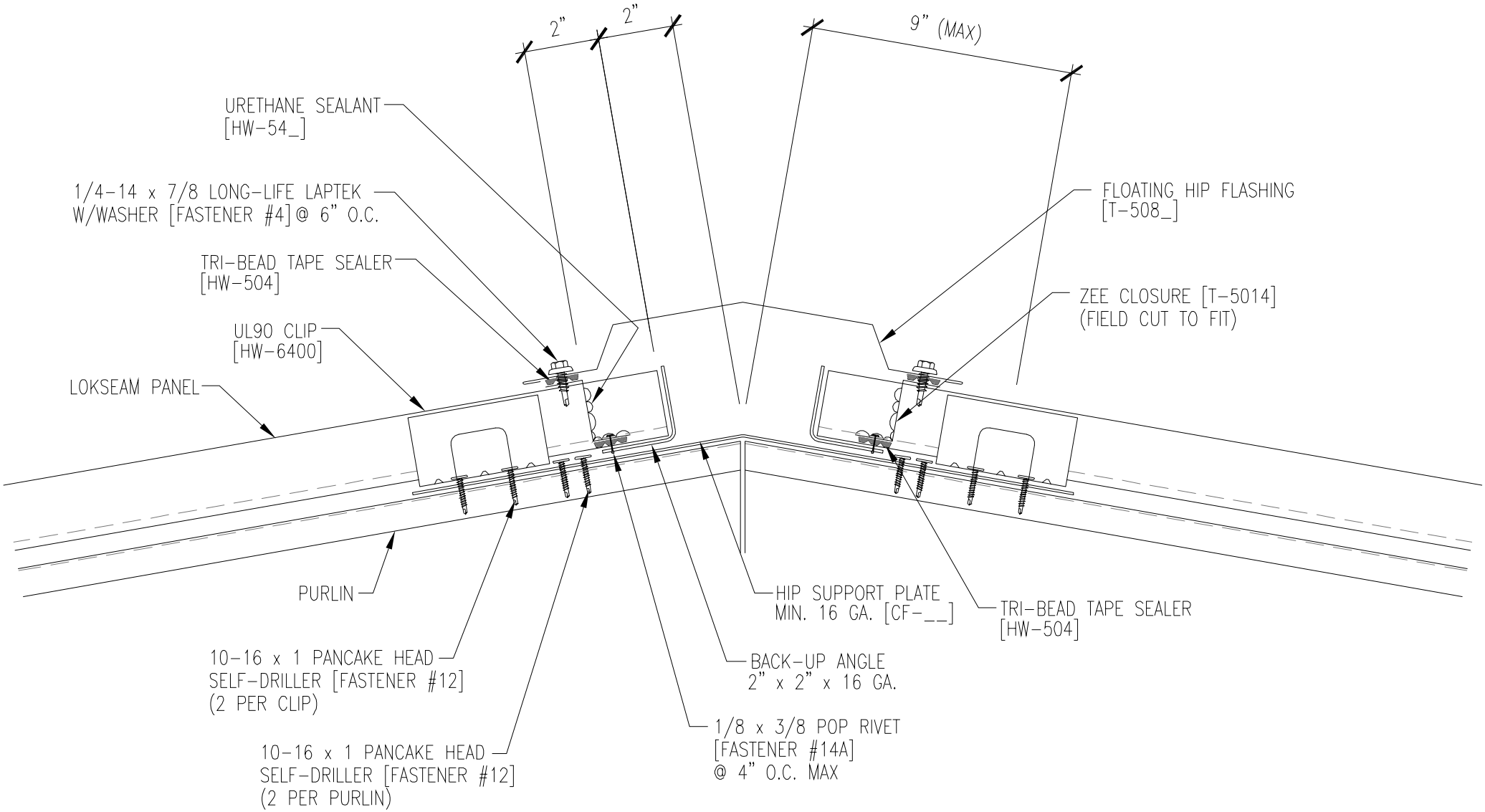
2"
2"
9" (MAX)
URETHANE SEALANT
[HW-54_]
1/4-14 x 7/8 LONG-LIFE LAPTEK
W/WASHER [FASTENER #4] @ 6" O.C.
TRI-BEAD TAPE SEALER
[HW-504]
UL90 CLIP
[HW-6400]
LOKSEAM PANEL
FLOATING HIP FLASHING
[T-508_]
ZEE CLOSURE [T-5014]
(FIELD CUT TO FIT)
PURLIN
10-16 x 1 PANCAKE HEAD
SELF-DRILLER [FASTENER #12]
(2 PER CLIP)
10-16 x 1 PANCAKE HEAD
SELF-DRILLER [FASTENER #12]
(2 PER PURLIN)
HIP SUPPORT PLATE
MIN. 16 GA. [CF-__]
BACK-UP ANGLE
2" x 2" x 16 GA.
1/8 x 3/8 POP RIVET
[FASTENER #14A]
@ 4" O.C. MAX
TRI-BEAD TAPE SEALER
[HW-504]